TURTLE PUMPS

Effective cost saving with VMECA improved system

VMECA® Turtle pump with integral vacuum filter and silencer can be combined with the optional vacuum On/Off control valve, vacuum release valve and vacuum switch to create an optimal vacuum solution for many applications. The VMECA® Turtle pump and optional components, due to the compact design and size, can be mounted close to the point of use reducing system volume and maintenance while improving cycle time.

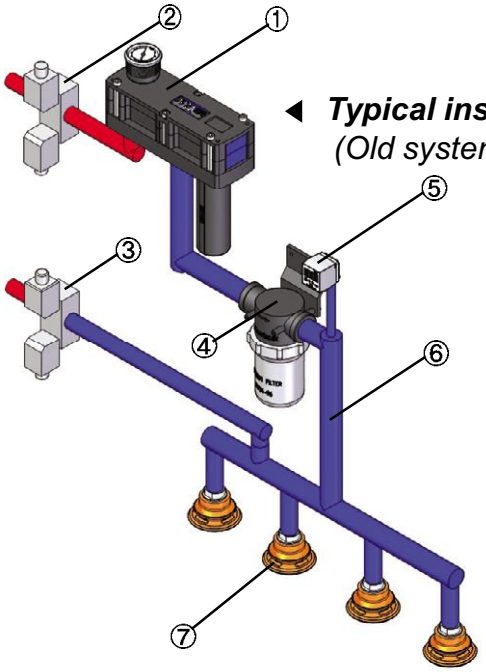

◀ ***Typical installation***
(Old system)

① Vacuum pump
② Air control valve
③ Vacuum release control valve
④ Vacuum filter
⑤ Vacuum switch
⑥ Vacuum pipe line
⑦ Suction cup

▼ **VMECA® *Improved system***
(New solution with Turtle Pump)
①+②+③+④+⑤+⑥

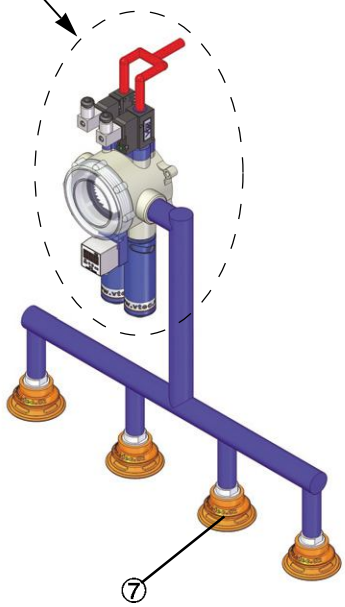

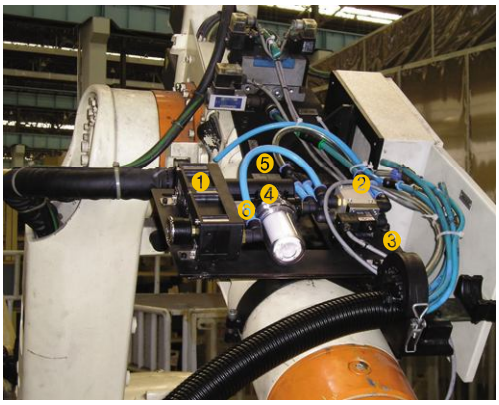

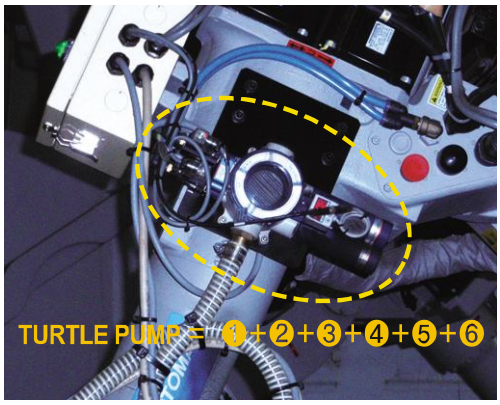

If each items goes through under the process same as below?

Select model (Technical dept) ➡ **Quotation** (Purchase dept.) ➡ **PO** ➡ **Store in** (Inventory) ➡ **Q.C** (QC dept.) ➡ **Installation** (assembly dept.) ➡ **Payment** (Account)

High installation and maintenance **Costs !!**

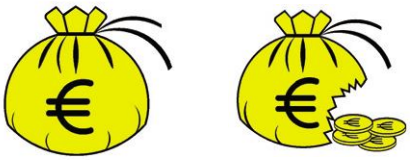

Very LOW installation and maintenance **Costs !!**

Specifications subject to change without notice.

Comparison of Vacuum Efficiency

▼ *Typical installation* (Old system)

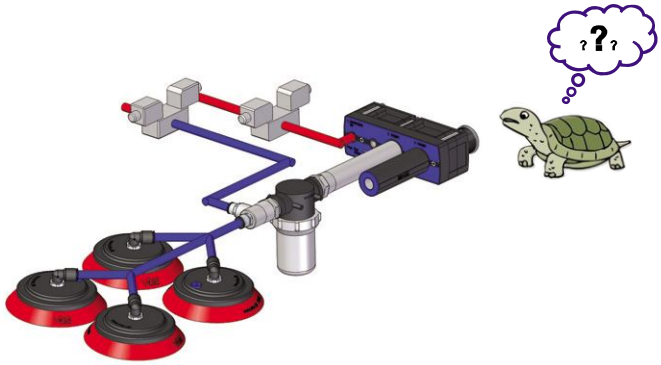

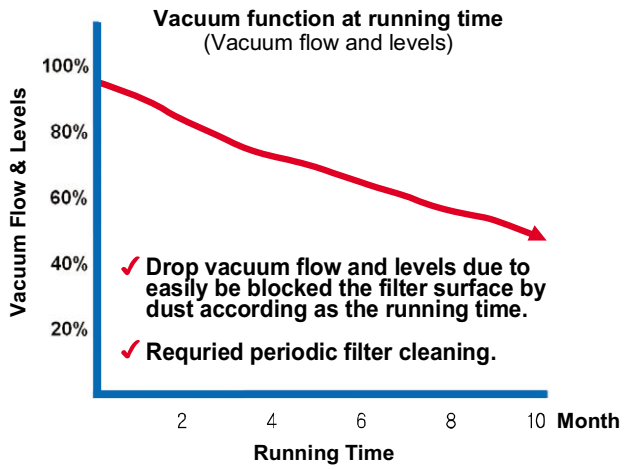

▼ *VMECA® Improved system*

(New solution with Turtle Pump)

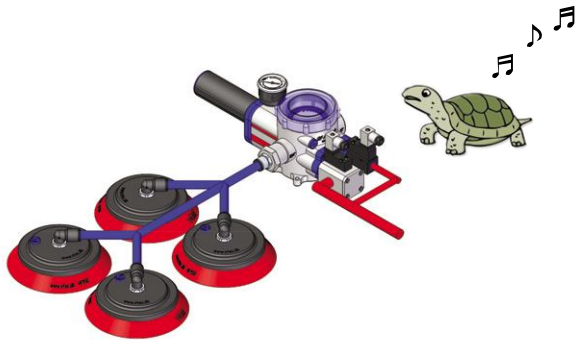

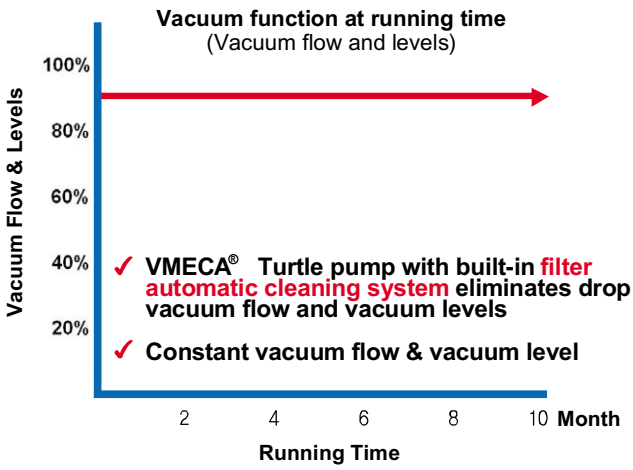

Comparison of Evacuation time at different Vacuum levels

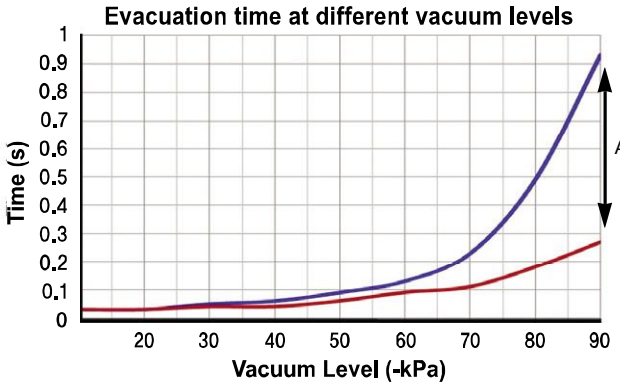

Typical installation (Old System)

VMECA® Improved System VTC3031.. Quick evacuation time by minimizing vacuum area with all-in-one system

Comparison of Vacuum level at different feed pressure

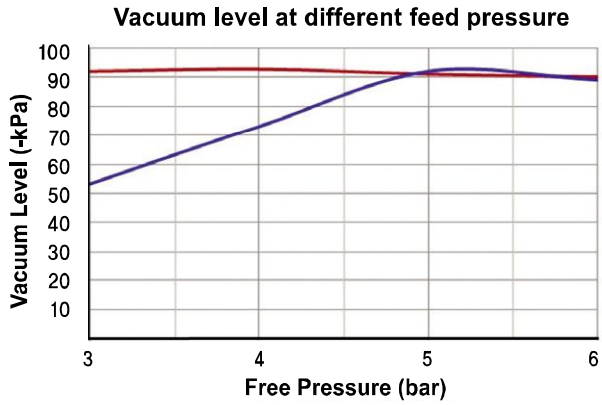

VMECA® Improved System

Typical installation (Old System)

- **High operational reliability** despite fluctuating or low compressed air pressure (Vacuum level ±2%)

Enable to decide the series of VMECA TURTLE PUMP the performance you need.

MIDI 3031 Series

▶ VTC Series

High vacuum level (-92 kPa) at **low compressed air pressure** (3~6 bar).
High vacuum flow rate to compensate for fluctuating or low compressed air pressure.
Suitable for sealed system applications such as lifting metal sheets or glass plate.

▶ VTCL Series

Extra high vacuum flow rate and suitable for **non-sealed system** applications.
Vacuum level of -75 kPa at a compressed air pressure of 6 bar.

Enable to decide the series of VMECA TURTLE PUMP the performance you need.

MIDI 3032 Series

▶ VTC Series

High vacuum level (-92 kPa) at **low compressed air pressure** (3~6 bar).
High vacuum flow rate to compensate for fluctuating or low compressed air pressure.
Suitable for sealed system applications such as lifting metal sheets or glass plate.

▶ VTCL Series

Extra high vacuum flow rate and suitable for **non-sealed system** applications.
Vacuum level of -75 kPa at a compressed air pressure of 6 bar.

Structure and Main advantage of Midi Turtle Pump

The VMECA Turtle Pump is recommended for applications requiring a compact, complete and easy to install, minimal maintenance.

MIDI

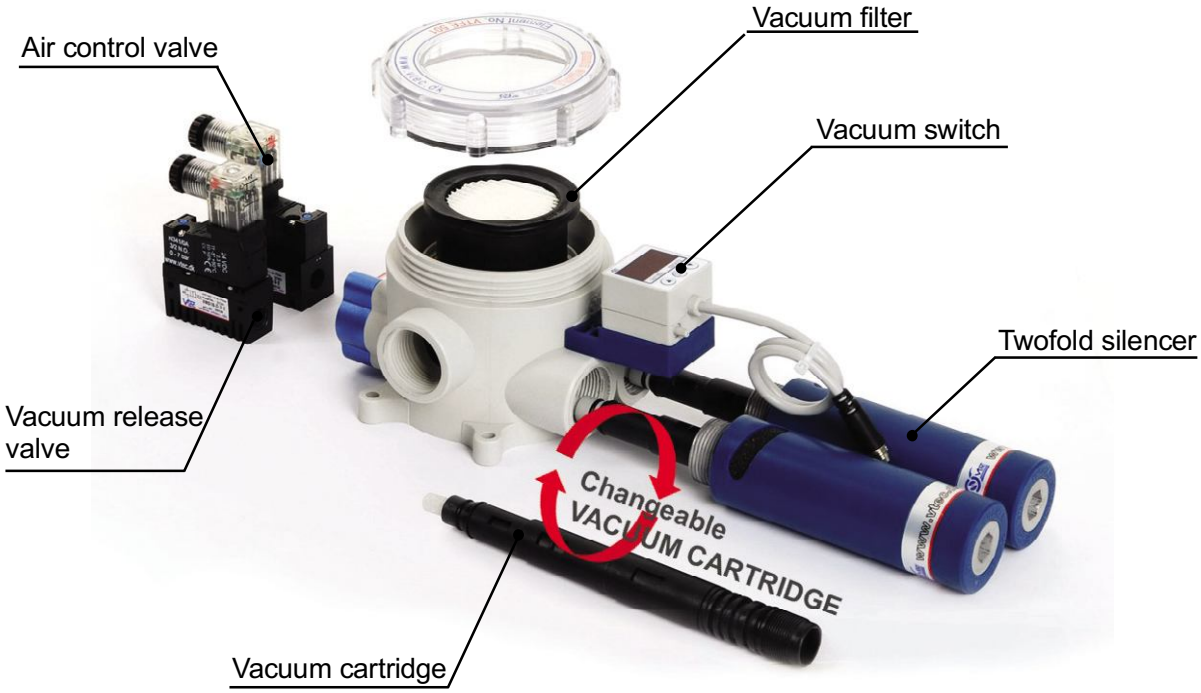

- ✓ **Patented design**
- ✓ **All-in-one compact design**
- ✓ **Light weight**
- ✓ **Multi vacuum ports**
- ✓ **Vacuum filter self cleaning system**
  - Eliminates periodic maintenance
- ✓ **VMECA Vacuum Cartridge**
  - High vacuum flow rate
  - High operational reliability despite fluctuating or low compressed air pressure
- ✓ **Twofold silencer**
  - Designed specially assure low noise level

Structure and Main advantage of Mega Turtle Pump

MEGA

■ VMECA® vacumm filter
- Prevents dust coming into the pump
- Pleated media for high dirt holding capacity
- Moisture, oil resistant
- Washable

■ VMECA® vacuum gauge or sensor
- Indicates vacuum level
- Digital output signal when set vacuum level is achieved

■ VMECA® air control valve
- Single or Double solenoid valve

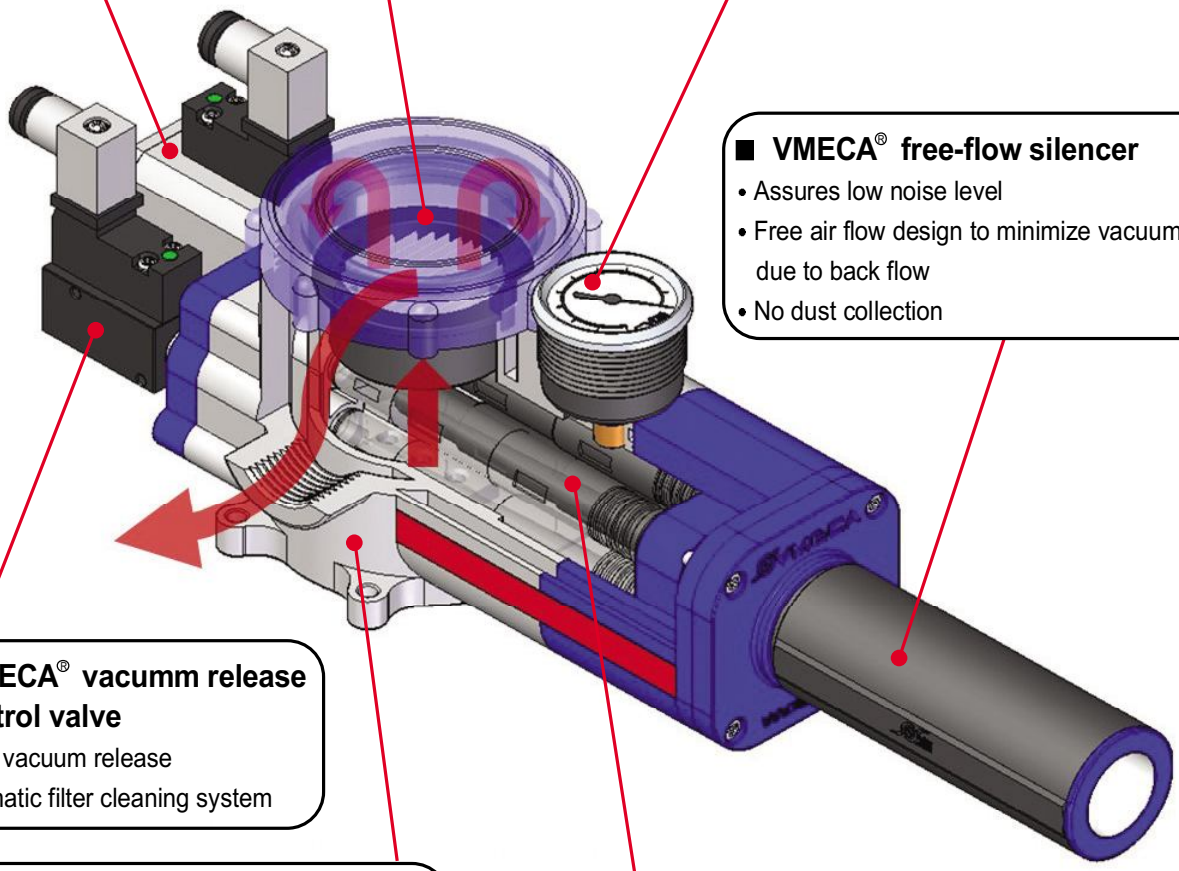

■ VMECA® free-flow silencer
- Assures low noise level
- Free air flow design to minimize vacuum loss due to back flow
- No dust collection

■ VMECA® vacumm release control valve
- Quick vacuum release
- Automatic filter cleaning system

■ Body
- Durable engineering plastic material
- Corrosion resistant
- Light weight
- Two vacuum ports : 3/4″ and 1″

■ VMECA® patented Vacuum Cartridge System
- **Multiple Vacuum cartridge available** up to 4 pcs
- **High operational reliability** despite fluctuating or low compressed air pressure
- **Air-Saving (AS) kit available to minimize energy** consumption (about 20times less)
- **Easily mountable and interchangeable** vacuum cartridge

APPLICATIONS

▲ Rotary Packaging machine (VTC3031)

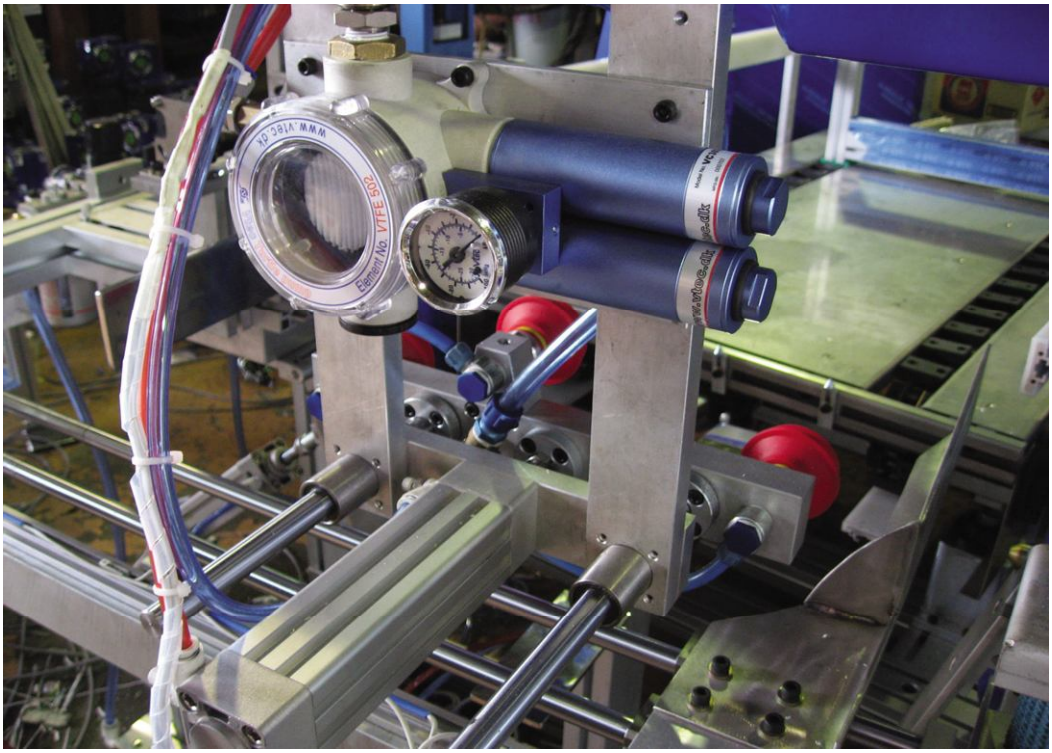

▲ Packaging machine : Carton boxes opening (VTC3032)

APPLICATIONS

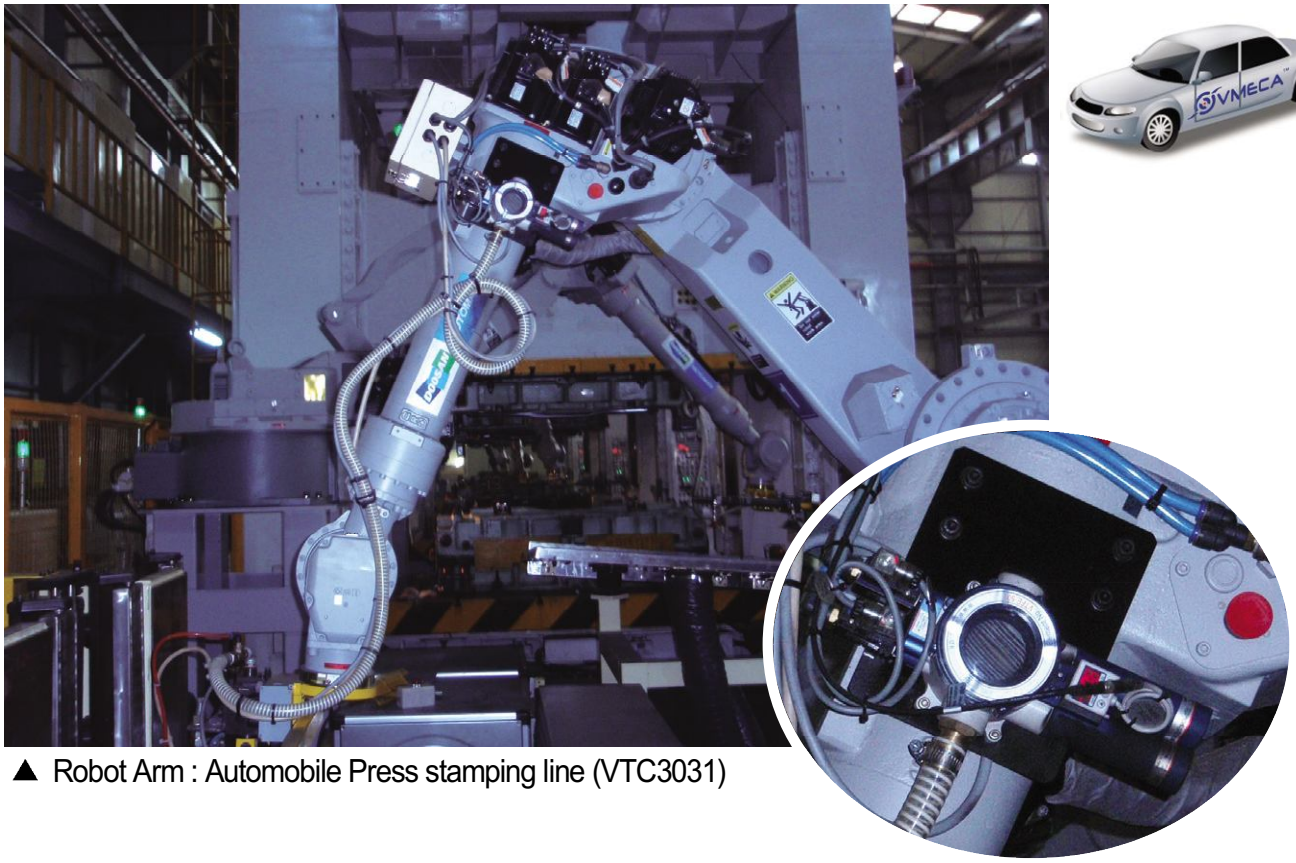

▲ Robot Arm : Automobile Press stamping line (VTC3031)

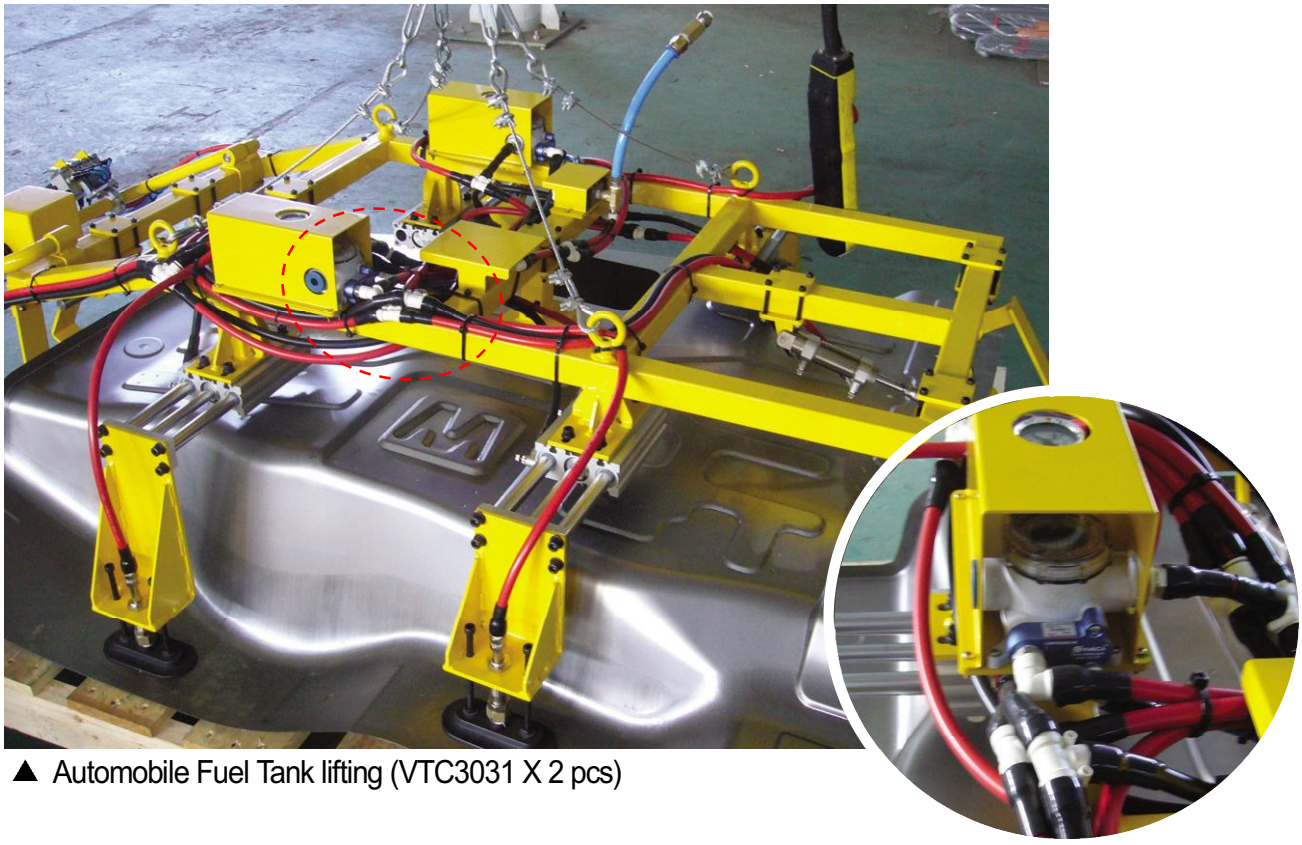

▲ Automobile Fuel Tank lifting (VTC3031 X 2 pcs)

VTC 3031/3021 Series

Max. vacuum level	: -93 kPa (-27.46 inHg)
Max. flow rate	: 341 Nl/min (12.04 scfm)
Supply air pressure	: 3 ~ 6 bar, max 7 bar (43.5~87 psi, max 101.5 psi)
Air consumption	: 97~152 Nl/min (3.43~5.37 scfm)
Supply air type	: Dry compressed air
Working temperature	: -20℃ to +80℃
Noise level	: 50~60 dBA

Main advantages

- Patented design.
- High operational reliability despite fluctuating or low compressed-air pressure.
- Integrated high dirt holding capacity pleated filter.
- VMECA Twofold Silencer^{PT} assures low noise levels.
- Optional Air-Saving(AS) kit available to minimize energy consumption.
- Optional factory installed Air control/Vacuum release valves and Vacuum switch available.
- Compact size and light weight.
- Easily mountable and interchangeable vacuum cartridge.

Order No.

VTC 3031 - 2 - AS - A3 R3 - CL - S2 N V

① ② ③ ④ ⑤ ⑥ ⑦ ⑧ ⑨

① Model

VTC 3021	- Two stage nozzle
• **VTC 3031(P)**	- Three stage nozzle

※ Remark:..(P) → G3/8"Exhaust Port

② Filter element & Connection port

	Material	Connection port
• **2**	Polyester (PE)	BSP Thread(G)

③ Air saving kit (📖 108)

No mark	- Standard
• **AS**	- Air saving kit

④ Voltage of air supply control valve

A1	-	AC110V
A2	-	AC220V
• **A3**	-	DC24V
D1*	-	AC110V
D2*	-	AC220V
D3*	-	DC24V

* D.. : Double solenoid valve is available only with 'DN' or 'DL', section ⑥

⑤ Voltage of vacuum release control valve

R1	-	AC110V
R2	-	AC220V
• **R3**	-	DC24V

⑥ Solenoid Terminal

DN	-	DIN type without lead wire
DL	-	DIN type with lamp without lead wire
• **CL***	-	Connector type with lamp & 0.3 m lead wire
2B*	-	DIN type with '2 in 1' BUS cable (Air control v/v + Vacuum release v/v)
3B*	-	DIN type with '3 in 1' BUS cable (Air control v/v + Vacuum release v/v + Digital switch)

* Can not available with double solenoid valve

※ Remark
CL : Available only with DC24V
3B : Available only with DC24V
Available only with 'S2' or 'S2P', section ⑦

☞ About 'BUS cable' (📖 340, 341)

⑦ Vacuum switch

No mark	-	Vacuum gauge.
• **S2(P)**	-	Digital display output 2points, No analog supply M8-4Pin Connector type 0.3m lead wire.
SG2(P)	-	Digital display output 2 points, No analog supply Grommet type 4-Core 2m lead wire.
SG3(P)	-	Digital display output 2 points, Analog supply Grommet type 5-Core 2m lead wire.

※ Remark: ① S..(P) → Output type :PNP open collector

② VCM8 42 : M8-4Pin connector wire. Only for type S2 or S2(P).

⑧ Non-return valve

No mark	-	Standard
• **N**	-	Non-return valve.

⑨ Sealing

No mark	-	Standard
• **V**	-	Viton®
E	-	EPDM

Performance Data

Model	MAX. Vacuum (−kPa)	Feed pressure (MPa)	Vacuum flow (Nl/min) at different vacuum level -kPa(-mmHg)									
			0 (0)	10 (75)	20 (150)	30 (225)	40 (300)	50 (375)	60 (450)	70 (525)	80 (600)	90 (675)
VTC3021..	75	0.22	164	122.5	88	53	31.4	28.5	16.5	4.6	-	-
	93	0.3	170	152	106	64	33	32	22	16.5	6.4	1.9
	93	0.4	171	154	127.5	94	69	43	23.3	17.3	6.9	2.1
VTC3031..	75	0.22	302	122.5	88	53	31.4	28.5	16.5	4.6	-	-
	93	0.3	338	152	106	64	33	32	22	16.5	6.4	1.9
	93	0.4	341	154	127.5	94	69	43	23.3	17.3	6.9	2.1

Model	Feed pressure (MPa)	Air consumption (Nl/min)	Time, s/l, to evacuate a volume to different vacuum level -kPa (-mmHg)								
			10 (75)	20 (150)	30 (225)	40 (300)	50 (375)	60 (450)	70 (525)	80 (600)	90 (675)
VTC3021..	0.22	97	0.03	0.12	0.21	0.38	0.47	0.73	1.62	-	-
	0.3	118	0.027	0.1	0.19	0.3	0.4	0.64	0.8	1.2	3.8
	0.4	152	0.026	0.058	0.09	0.1	0.25	0.5	0.69	1.05	3.5
VTC3031..	0.22	97	0.019	0.09	0.1	0.32	0.42	0.73	1.62	-	-
	0.3	118	0.015	0.07	0.18	0.28	0.38	0.64	0.8	1.2	3.8
	0.4	152	0.01	0.048	0.07	0.09	0.2	0.42	0.6	1	3.4

▶ VTC-3021..

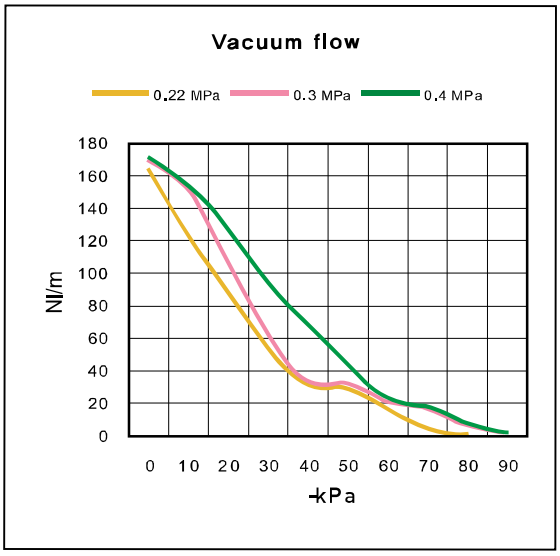

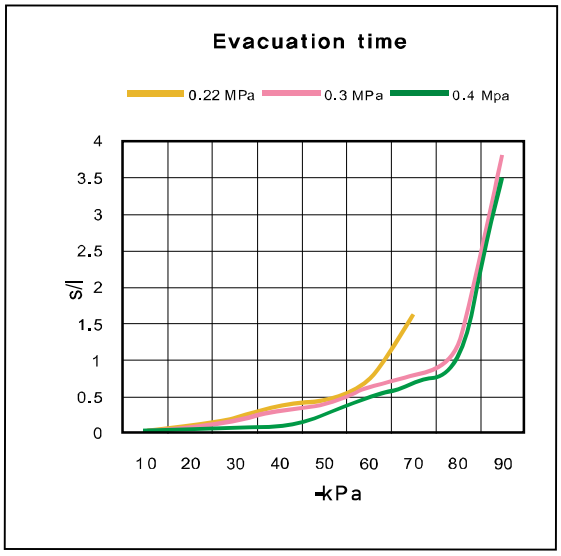

▶ VTC-3031..

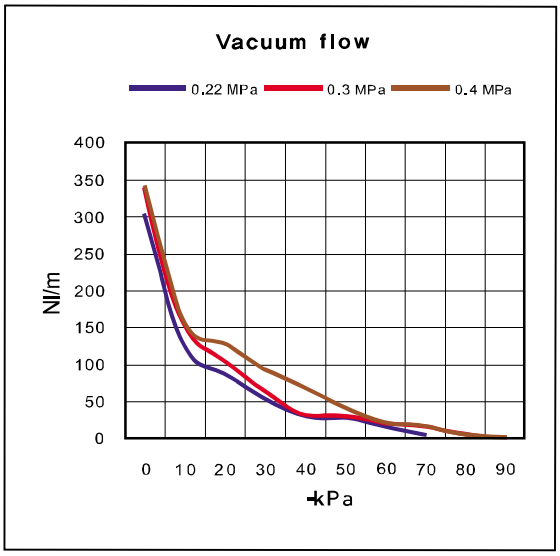

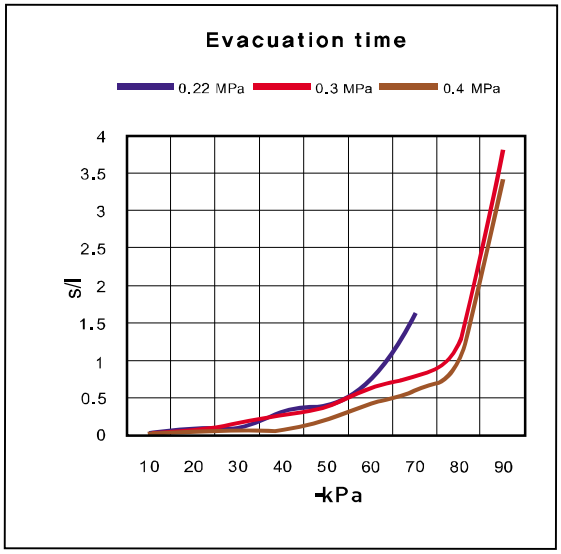

VTCL 3031/3021 Series

Max. vacuum level	: -75 kPa (-22.15 inHg)
Max. flow rate	: 362 Nl/min (12.79 scfm)
Supply air pressure	: 4 ~ 6 bar, max 7 bar (58~87 psi, max 101.5 psi)
Air consumption	: 70~104 Nl/min (2.47~3.67 scfm)
Supply air type	: Dry compressed air
Working temperature	: -20℃ to +80℃
Noise level	: 50~60 dBA

Main advantages

- Patented design.
- High operational reliability despite fluctuating or low compressed-air pressure.
- Integrated high dirt holding capacity pleated filter.
- VMECA Twofold Silencer^{PT} assures low noise levels.
- Optional Air-Saving(AS) kit available to minimize energy consumption.
- Optional factory installed Air control/Vacuum release valves and Vacuum switch available.
- Compact size and light weight.
- Easily mountable and interchangeable vacuum cartridge.

Order No.

VTCL 3031 - 2 - AS - A3 R3 - CL - S2 N V

① ② ③ ④ ⑤ ⑥ ⑦ ⑧ ⑨

① Model

VTCL 3021	- Two stage nozzle
• **VTCL 3031(P)**	- Three stage nozzle

※ Remark:..(P) → G3/8"Exhaust Port

② Filter element & Connection port

	Material	Connection port
• **2**	Polyester (PE)	BSP Thread(G)

③ Air saving kit (📖 108)

No mark	-	Standard
• **AS**	-	Air saving kit

④ Voltage of air supply control valve

A1	-	AC110V
A2	-	AC220V
• **A3**	-	DC24V
D1*	-	AC110V
D2*	-	AC220V
D3*	-	DC24V

* D.. : Double solenoid valve is available only with 'DN' or 'DL', section ⑥

⑤ Voltage of vacuum release control valve

R1	-	AC110V
R2	-	AC220V
• **R3**	-	DC24V

⑥ Solenoid Terminal

DN	-	DIN type without lead wire
DL	-	DIN type with lamp without lead wire
• **CL***	-	Connector type with lamp & 0.3 m lead wire
2B*	-	DIN type with '2 in 1' BUS cable (Air control v/v + Vacuum release v/v)
3B*	-	DIN type with '3 in 1' BUS cable (Air control v/v + Vacuum release v/v + Digital switch)

* Can not available with double solenoid valve

※ Remark
CL : Available only with DC24V
3B : Available only with DC24V
Available only with 'S2' or 'S2P', section ⑦

☞ About 'BUS cable' (📖 340, 341)

⑦ Vacuum switch

No mark	-	Vacuum gauge.
• **S2(P)**	-	Digital display output 2points, No analog supply M8-4Pin Connector type 0.3m lead wire.
SG2(P)	-	Digital display output 2 points, No analog supply Grommet type 4-Core 2m lead wire.
SG3(P)	-	Digital display output 2 points, Analog supply Grommet type 5-Core 2m lead wire.

※ Remark: ① S..(P) → Output type :PNP open collector

② VCM8 42 : M8-4Pin connector wire. Only for type S2 or S2(P).

⑧ Non-return valve

No mark	-	Standard
• **N**	-	Non-return valve.

⑨ Sealing

No mark	-	Standard
• **V**	-	Viton®
E	-	EPDM

Performance Data

Model	MAX. Vacuum (-kPa)	Feed pressure (MPa)	Vacuum flow (Nl/min) at different vacuum levels -kPa (-mmHg)									
			0 (0)	10 (75)	20 (150)	30 (225)	40 (300)	50 (375)	60 (450)	70 (525)	80 (600)	90 (675)
VTCL3021..	60	0.4	188	158	110	70	46	28	6.8	-	-	-
	70	0.5	195	176	130	82	50	37.5	23	11.3	-	-
	75	0.6	200	183	154	100	52	38	32	22	-	-
VTCL3031..	60	0.4	302	176	110	70	46	28	6.8	-	-	-
	70	0.5	344	200	130	82	50	37.5	23	11.3	-	-
	75	0.6	362	194	154	100	52	38	32	22	-	-

Model	Feed pressure (MPa)	Air consumption (Nl/min)	Time, s/l, to evacuate a volume to different vacuum levels -kPa (-mmHg)								
			10 (75)	20 (150)	30 (225)	40 (300)	50 (375)	60 (450)	70 (525)	80 (600)	90 (675)
VTCL3021..	0.4	70	0.035	0.084	0.17	0.29	0.38	0.8	-	-	-
	0.5	85	0.027	0.08	0.15	0.25	0.3	0.4	0.8	-	-
	0.6	104	0.028	0.08	0.12	0.2	0.28	0.36	0.6	-	-
VTCL3031..	0.4	70	0.028	0.09	0.17	0.29	0.38	0.8	-	-	-
	0.5	85	0.013	0.08	0.15	0.25	0.3	0.4	0.8	-	-
	0.6	104	0.012	0.07	0.12	0.2	0.28	0.36	0.6	-	-

▶ VTCL-3021..

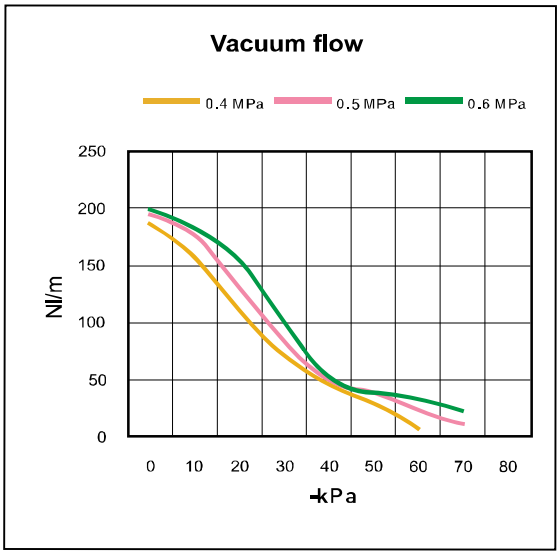

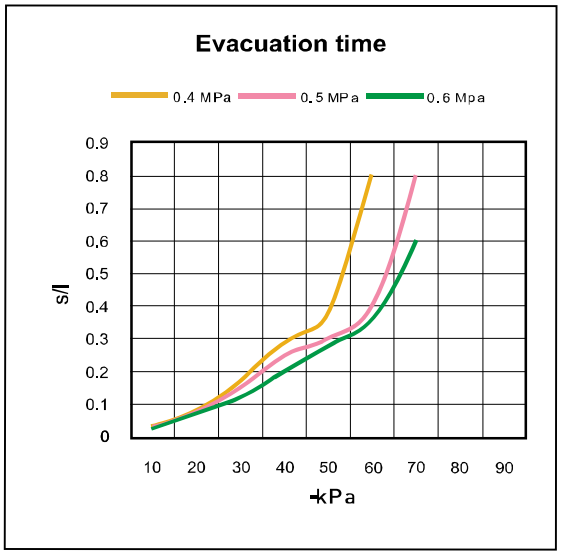

▶ VTCL-3031..

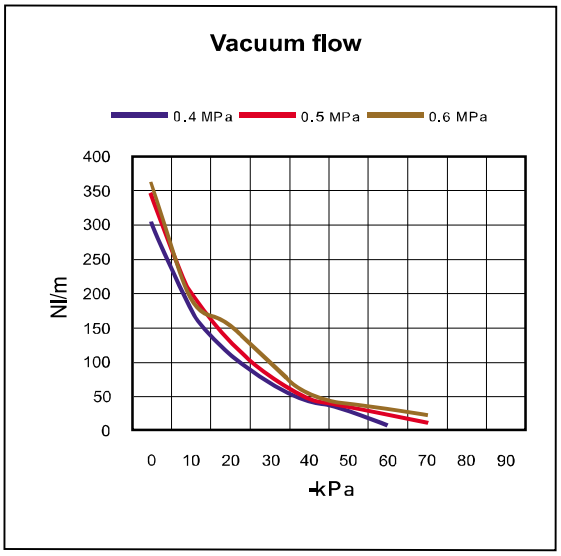

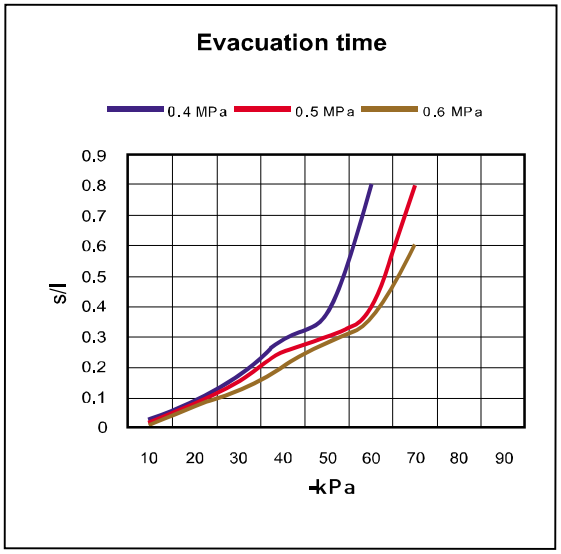

Dimensional Information

With Air Control valve, Vacuum Release Control valve and Digital Vacuum Switch

Series VTC 3031.. / VTCL 3031..

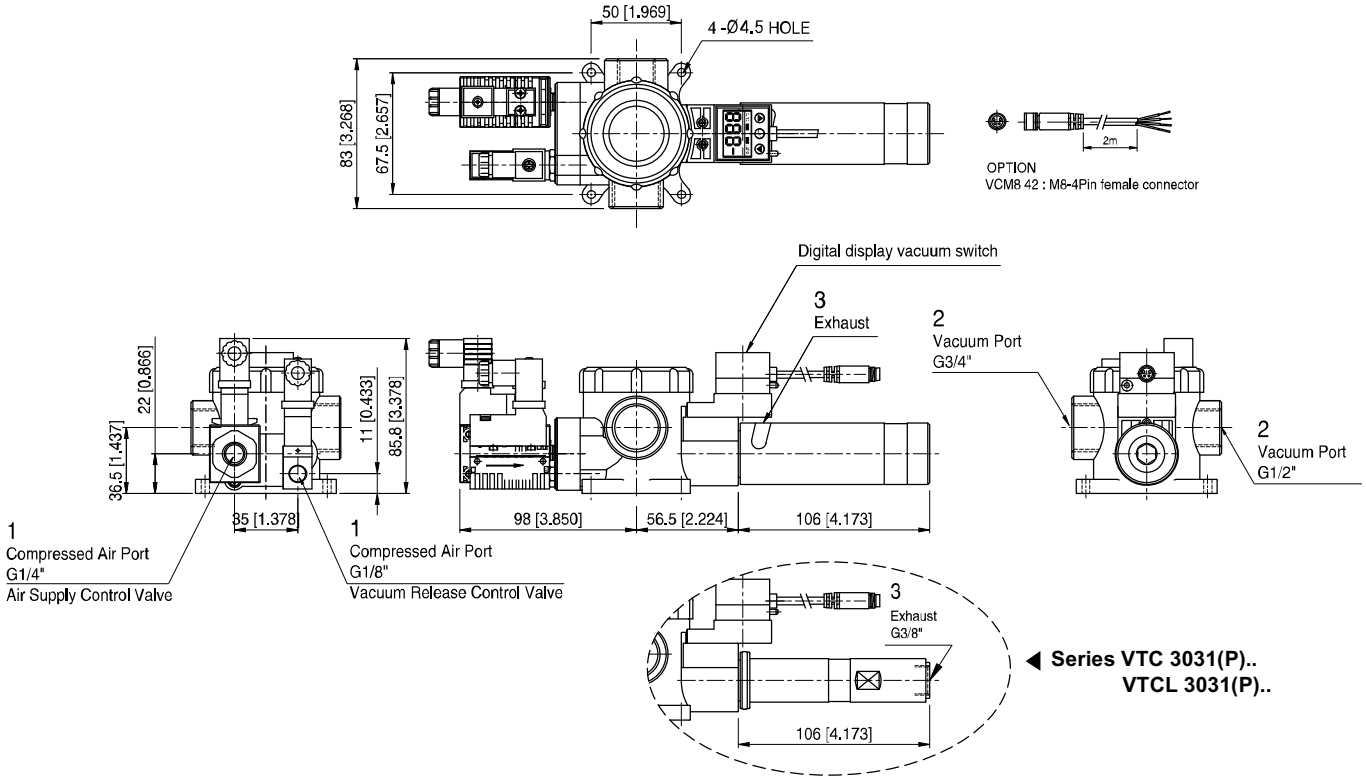

Measure unit : mm [in]

With Air Control valve, Vacuum Release Control valve and Digital Vacuum Switch

Series VTC 3021.. / VTCL 3021..

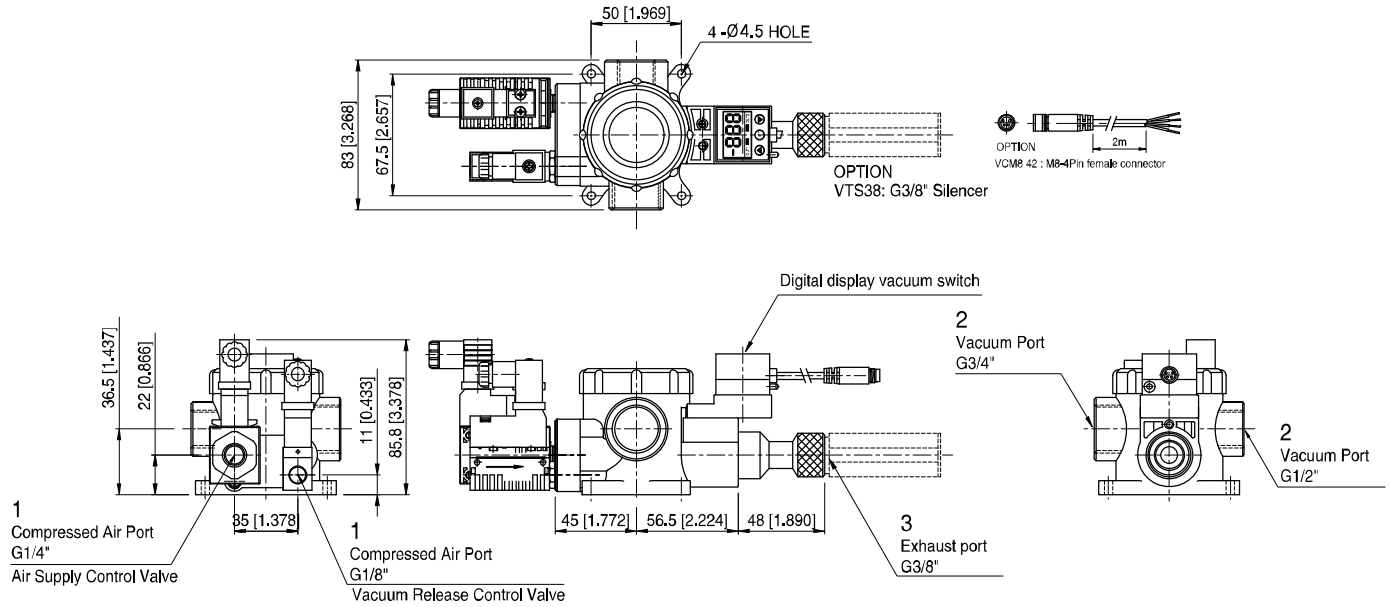

Measure unit : mm [in]

Dimensional Information

Standard

Series VTC 3031.. / VTCL 3031..

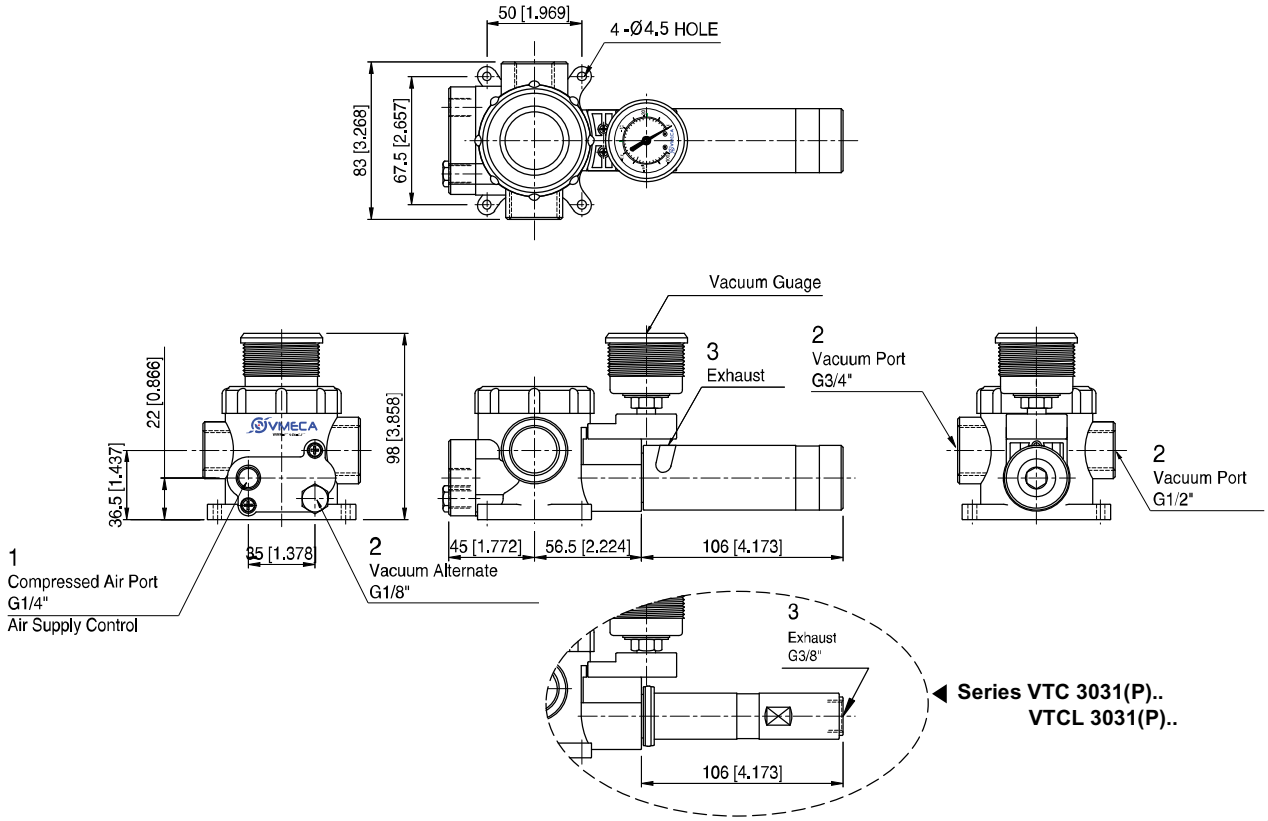

Measure unit : mm [in]

Standard

Series VTC 3021.. / VTCL 3021..

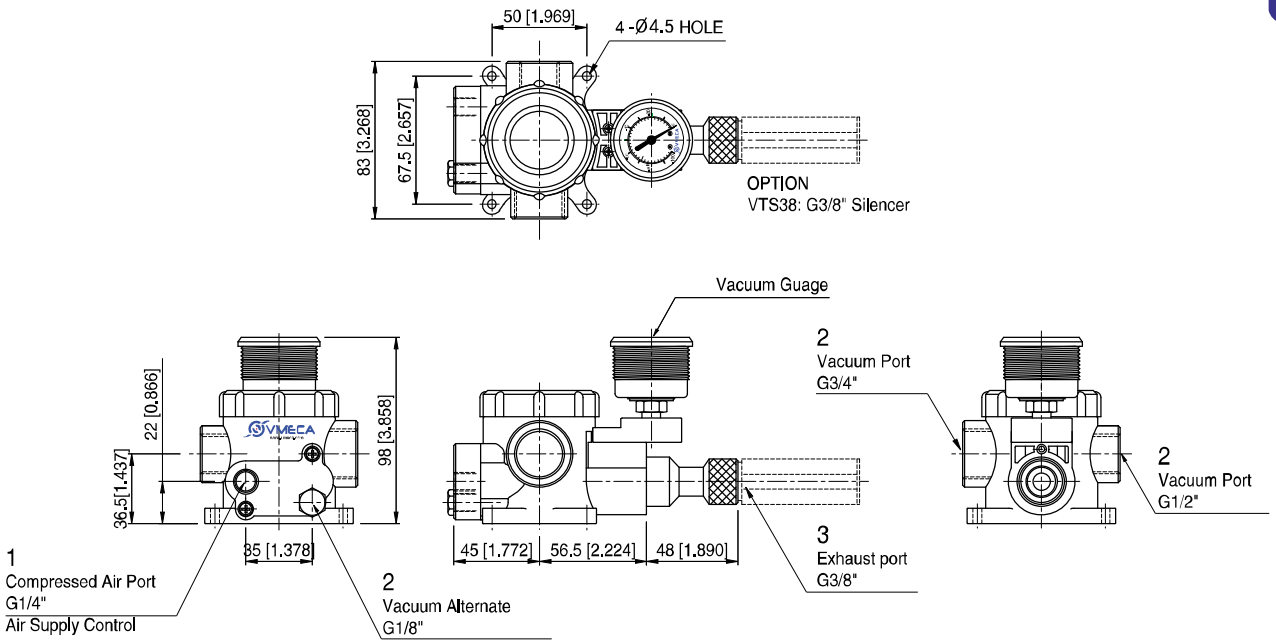

Measure unit : mm [in]

VACUUM PUMPS

VTC 3032 / 3022 Series

Max. vacuum level : -93 kPa (-27.46 inHg)

Max. flow rate : 688 Nl/min (24.3 scfm)

Supply air pressure : 3 ~ 6 bar, max 7 bar (43.5~87 psi, max 101.5 psi)

Air consumption : 194~304 Nl/min (6.85~10.74 scfm)

Supply air type : Dry compressed air

Working temperature : -20℃ to +80℃

Noise level : 50~60 dBA

Main advantages

- Patented design.
- High operational reliability despite fluctuating or low compressed-air pressure.
- Integrated high dirt holding capacity pleated filter.
- VMECA Twofold Silencer[PT] assures low noise levels.
- Optional Air-Saving(AS) kit available to minimize energy consumption.
- Optional factory installed Air control/Vacuum release valves and Vacuum switch available.
- Compact size and light weight.
- Easily mountable and interchangeable vacuum cartridge.

Order No.

VTC 3032 - 2 - AS - A3 R3 - CL - S2 N V

① ② ③ ④ ⑤ ⑥ ⑦ ⑧ ⑨

① Model

VTC 3022	- Two stage nozzle
• **VTC 3032(P)**	- Three stage nozzle

※ Remark:..(P) → G3/8"Exhaust Port

② Filter element & Connection port

	Material	Connection port
• **2**	Polyester (PE)	BSP Thread(G)

③ Air saving kit (📖 108)

No mark	- Standard
• **AS**	- Air saving kit

④ Voltage of air supply control valve

A1	-	AC110V
A2	-	AC220V
• **A3**	-	DC24V
D1*	-	AC110V
D2*	-	AC220V
D3*	-	DC24V

* D.. : Double solenoid valve is available only with 'DN' or 'DL', section ⑥

⑤ Voltage of vacuum release control valve

R1	-	AC110V
R2	-	AC220V
• **R3**	-	DC24V

⑥ Solenoid Terminal

DN	-	DIN type without lead wire
DL	-	DIN type with lamp without lead wire
• **CL***	-	Connector type with lamp & 0.3 m lead wire
2B*	-	DIN type with '2 in 1' BUS cable (Air control v/v + Vacuum release v/v)
3B*	-	DIN type with '3 in 1' BUS cable (Air control v/v + Vacuum release v/v + Digital switch)

* Can not available with double solenoid valve

※ Remark
CL : Available only with DC24V
3B : Available only with DC24V
Available only with 'S2' or 'S2P', section ⑦

☞ About 'BUS cable' (📖 340, 341)

⑦ Vacuum switch

No mark	-	Vacuum gauge.
• **S2(P)**	-	Digital display output 2points, No analog supply M8-4Pin Connector type 0.3m lead wire.
SG2(P)	-	Digital display output 2 points, No analog supply Grommet type 4-Core 2m lead wire.
SG3(P)	-	Digital display output 2 points, Analog supply Grommet type 5-Core 2m lead wire.

※ Remark: ① S..(P) → Output type :PNP open collector

② VCM8 42 : M8-4Pin connector wire. Only for type S2 or S2(P).

⑧ Non-return valve

No mark	-	Standard
• **N**	-	Non-return valve.

⑨ Sealing

No mark	-	Standard
• **V**	-	Viton®
E	-	EPDM

Performance Data

Model	MAX. Vacuum (-kPa)	Feed pressure (MPa)	Vacuum flow, Nl/min, at different vacuum levels -kPa (-mmHg)									
			0 (0)	10 (75)	20 (150)	30 (225)	40 (300)	50 (375)	60 (450)	70 (525)	80 (600)	90 (675)
VTC3022..	75	0.22	328	245	176	106	62.8	57	33	9.2	-	-
	93	0.3	340	304	212	128	66	64	44	33	12.8	3.8
	93	0.4	342	308	255	188	138	86	46.6	34.6	13.8	4.2
VTC3032..	75	0.22	604	245	176	106	62.8	57	33	92	-	-
	93	0.3	676	304	212	128	66	64	44	33	12.8	3.8
	93	0.4	682	308	255	188	138	86	46.6	34.6	13.8	4.2

Model	Feed pressure (MPa)	Air consumption (Nl/min)	Time, s/l, to evacuate a volume to different vacuum levels -kPa (-mmHg)								
			10 (75)	20 (150)	30 (225)	40 (300)	50 (375)	60 (450)	70 (525)	80 (600)	90 (675)
VTC3022..	0.22	194	0.018	0.065	0.108	0.2	0.25	0.395	0.81	-	-
	0.3	236	0.016	0.05	0.07	0.16	0.23	0.34	0.5	0.795	2.01
	0.4	304	0.014	0.029	0.043	0.05	0.13	0.25	0.355	0.71	1.75
VTC3032..	0.22	194	0.011	0.043	0.05	0.17	0.23	0.38	0.81	-	-
	0.3	236	0.01	0.032	0.055	0.15	0.22	0.33	0.48	0.78	1.98
	0.4	304	0.01	0.026	0.037	0.047	0.12	0.23	0.35	0.7	1.72

▶ VTC-3022..

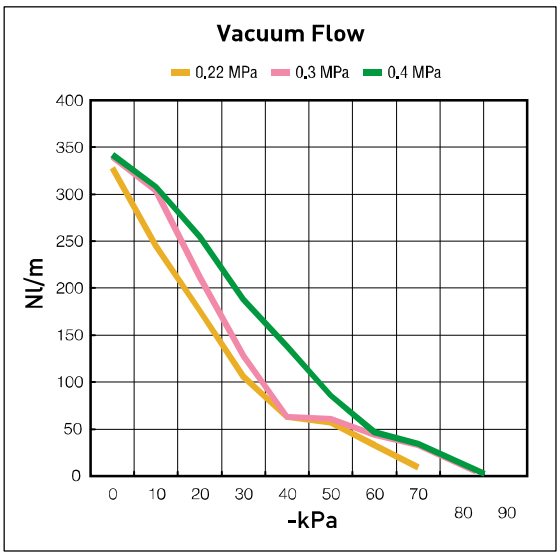

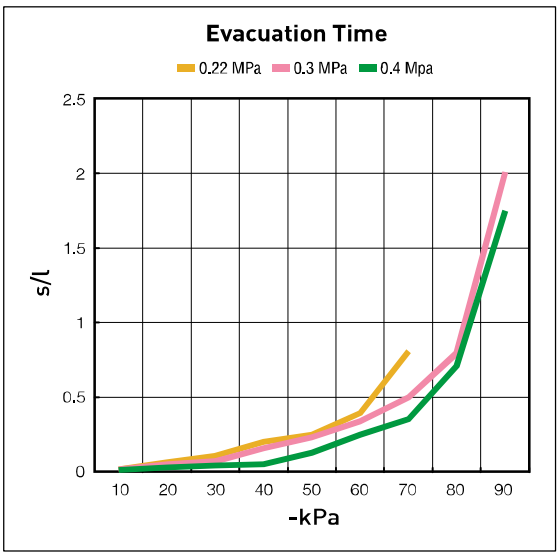

▶ VTC-3032..

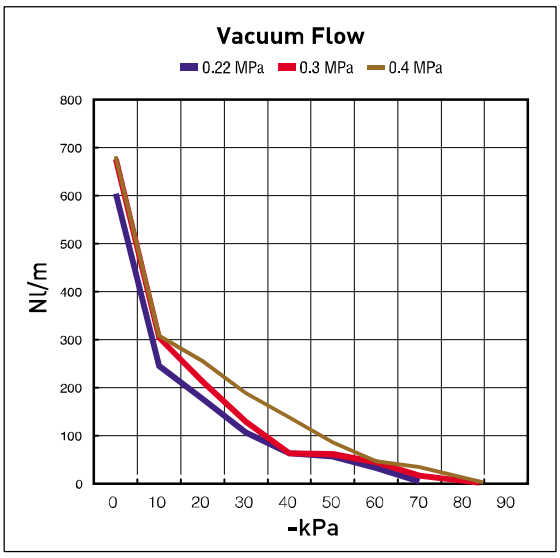

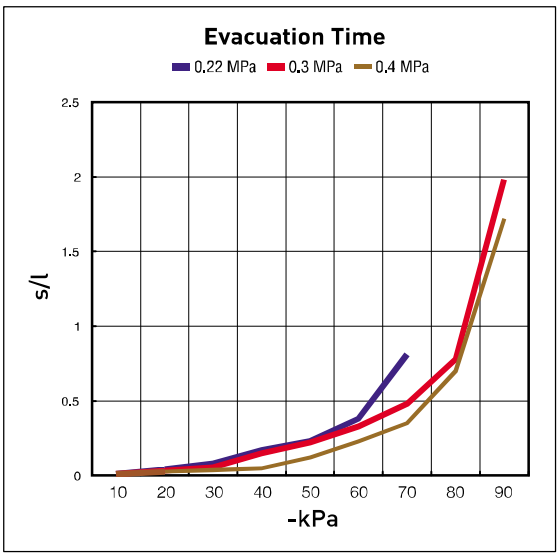

VTCL 3032 / 3022 Series

Max. vacuum level : -75 kPa (-22.15 inHg)

Max. flow rate : 724 Nl/min (25.57 scfm)

Supply air pressure : 4 ~ 6 bar, max 7 bar (58~87 psi, max 101.5 psi)

Air consumption : 140~208 Nl/min (4.94~7.35 scfm)

Supply air type : Dry compressed air

Working temperature : -20℃ to +80℃

Noise level : 50~60 dBA

Main advantages

- Patented design.
- High operational reliability despite fluctuating or low compressed-air pressure.
- Integrated high dirt holding capacity pleated filter.
- VMECA Twofold Silencer[PT] assures low noise levels.
- Optional Air-Saving(AS) kit available to minimize energy consumption.
- Optional factory installed Air control/Vacuum release valves and Vacuum switch available.
- Compact size and light weight.
- Easily mountable and interchangeable vacuum cartridge.

Order No.

VTCL 3032 - 2 - AS - A3 R3 - CL - S2 N V

① ② ③ ④ ⑤ ⑥ ⑦ ⑧ ⑨

① Model

VTCL 3022	- Two stage nozzle
• **VTCL 3032(P)**	- Three stage nozzle

※ Remark:..(P) → G3/8"Exhaust Port

② Filter element & Connection port

	Material	Connection port
• **2**	Polyester (PE)	BSP Thread(G)

③ Air saving kit (📖108)

No mark	-	Standard
• **AS**	-	Air saving kit

④ Voltage of air supply control valve

A1	-	AC110V
A2	-	AC220V
• **A3**	-	DC24V
D1*	-	AC110V
D2*	-	AC220V
D3*	-	DC24V

* D.. : Double solenoid valve is available only with 'DN' or 'DL', section ⑥

⑤ Voltage of vacuum release control valve

R1	-	AC110V
R2	-	AC220V
• **R3**	-	DC24V

⑥ Solenoid Terminal

DN	-	DIN type without lead wire
DL	-	DIN type with lamp without lead wire
• **CL***	-	Connector type with lamp & 0.3 m lead wire
2B*	-	DIN type with '2 in 1' BUS cable (Air control v/v + Vacuum release v/v)
3B*	-	DIN type with '3 in 1' BUS cable (Air control v/v + Vacuum release v/v + Digital switch)

* Can not available with double solenoid valve

※ Remark
CL : Available only with DC24V
3B : Available only with DC24V
Available only with 'S2' or 'S2P', section ⑦

☞ About 'BUS cable' (📖 340, 341)

⑦ Vacuum switch

No mark	-	Vacuum gauge.
• **S2(P)**	-	Digital display output 2points, No analog supply M8-4Pin Connector type 0.3m lead wire.
SG2(P)	-	Digital display output 2 points, No analog supply Grommet type 4-Core 2m lead wire.
SG3(P)	-	Digital display output 2 points, Analog supply Grommet type 5-Core 2m lead wire.

※ Remark: ① S..(P) → Output type :PNP open collector

② VCM8 42 : M8-4Pin connector wire. Only for type S2 or S2(P).

⑧ Non-return valve

No mark	-	Standard
• **N**	-	Non-return valve.

⑨ Sealing

No mark	-	Standard
• **V**	-	Viton®
E	-	EPDM

Performance Data

Model	MAX. Vacuum (-kPa)	Feed pressure (MPa)	Vacuum flow, Nl/min, at different vacuum levels -kPa (-mmHg)									
			0 (0)	10 (75)	20 (150)	30 (225)	40 (300)	50 (375)	60 (450)	70 (525)	80 (600)	90 (675)
VTCL3022..	60	0.4	376	316	220	140	92	56	13.6	-	-	-
	70	0.5	390	352	260	164	100	75	46	23.8	-	-
	75	0.6	400	366	308	200	104	76	64	44	-	-
VTCL3032..	60	0.4	604	352	220	140	92	56	13.6	-	-	-
	70	0.5	688	392	260	164	100	75	46	23.8	-	-
	75	0.6	724	415	308	200	104	76	64	44	-	-

Model	Feed pressure (MPa)	Air consumption (Nl/min)	Time, s/l, to evacuate a volume to different vacuum levels -kPa (-mmHg)								
			10 (75)	20 (150)	30 (225)	40 (300)	50 (375)	60 (450)	70 (525)	80 (600)	90 (675)
VTCL3022	0.4	140	0.018	0.04	0.08	0.145	0.195	0.5	-	-	-
	0.5	170	0.014	0.036	0.075	0.125	0.15	0.2	0.4	-	-
	0.6	208	0.013	0.032	0.06	0.1	0.155	0.18	0.35	-	-
VTCL3032	0.4	140	0.013	0.037	0.073	0.14	0.19	0.45	-	-	-
	0.5	170	0.009	0.032	0.06	0.128	0.16	0.25	0.43	-	-
	0.6	208	0.006	0.03	0.047	0.098	0.15	0.2	0.32	-	-

▶ VTCL-3022..

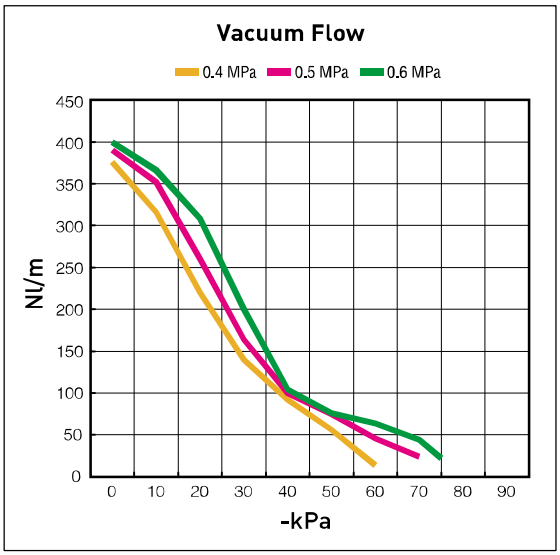

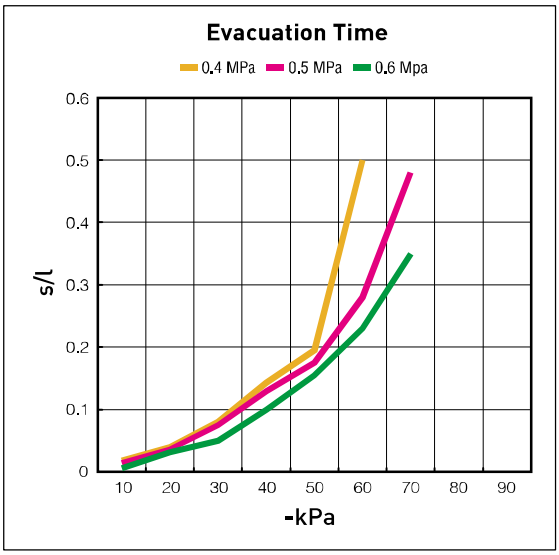

▶ VTCL-3032..

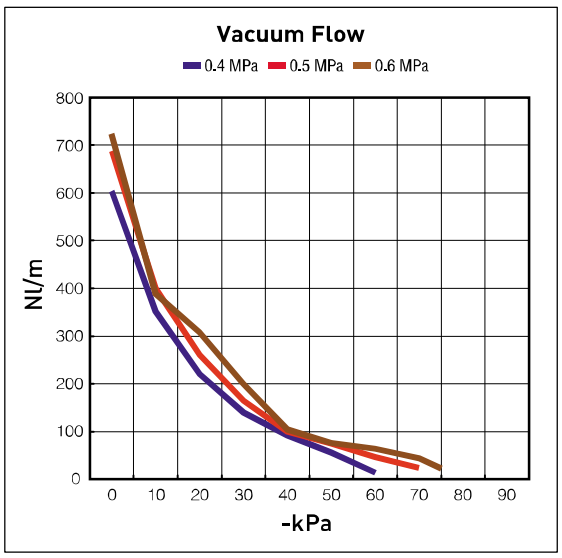

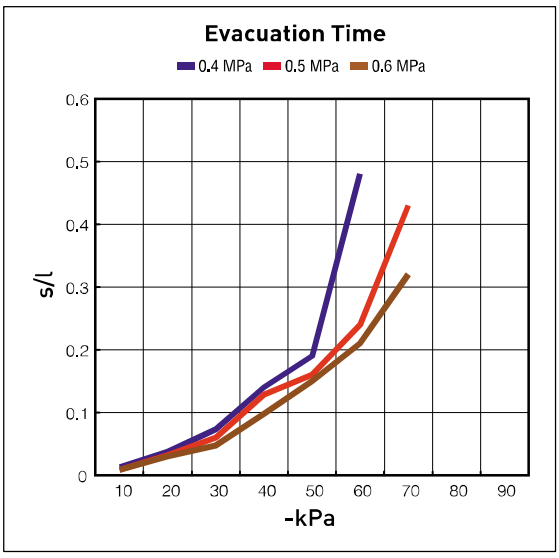

Dimensional Information

With Air Control valve, Vacuum Release Control valve and Digital Vacuum Switch

VTC 3032.. / VTCL 3032..

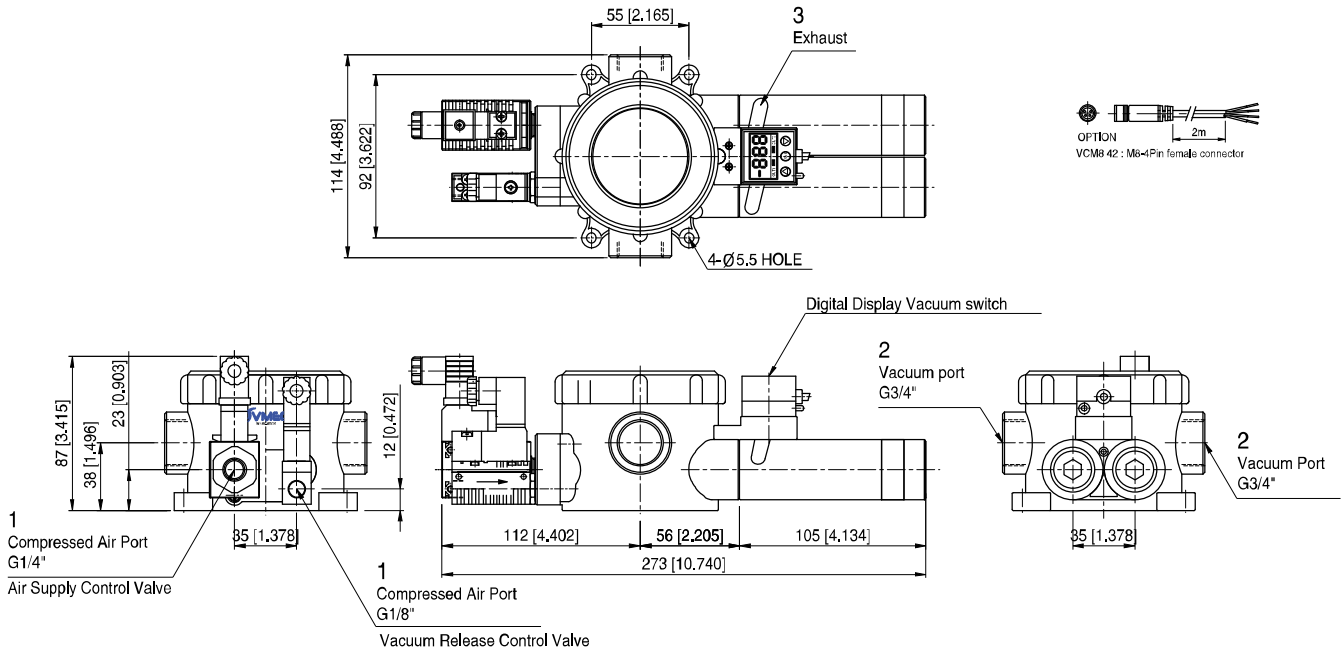

Measure unit : mm [in]

With Air Control valve, Vacuum Release Control valve and Digital Vacuum Switch

VTC 3022.. / VTCL 3022..

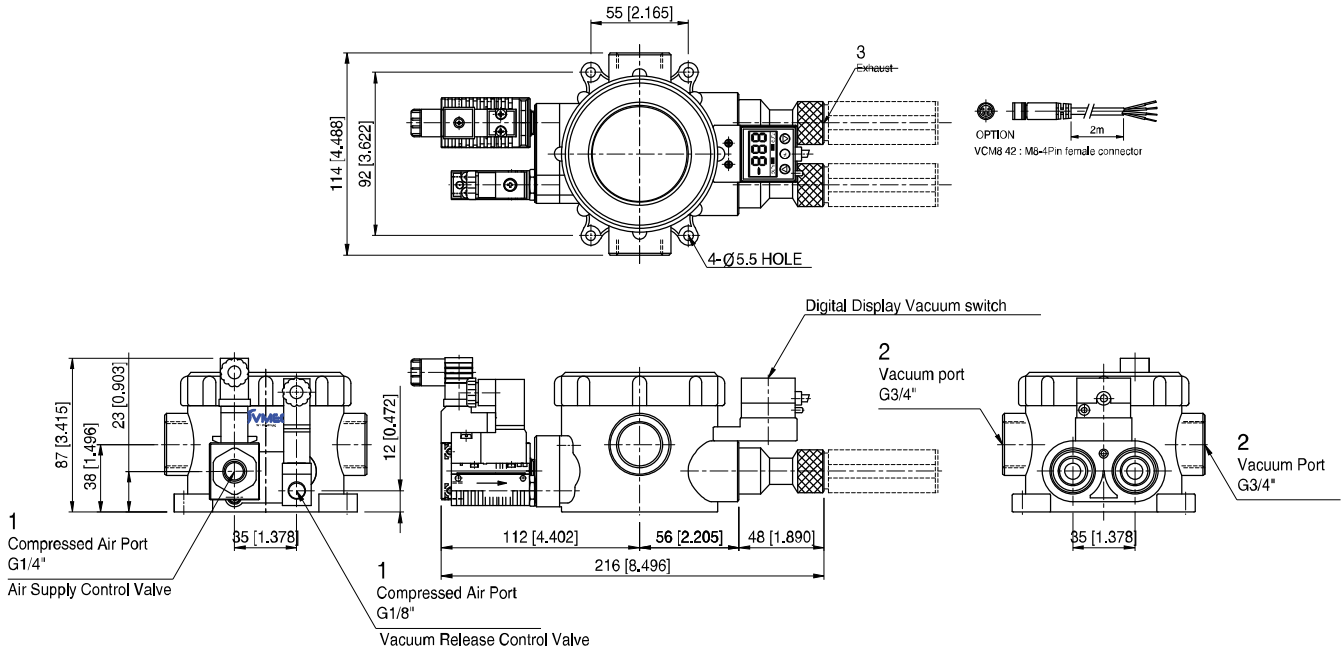

Measure unit : mm [in]

Dimensional Information

Standard

VTC 3032.. / VTCL 3032..

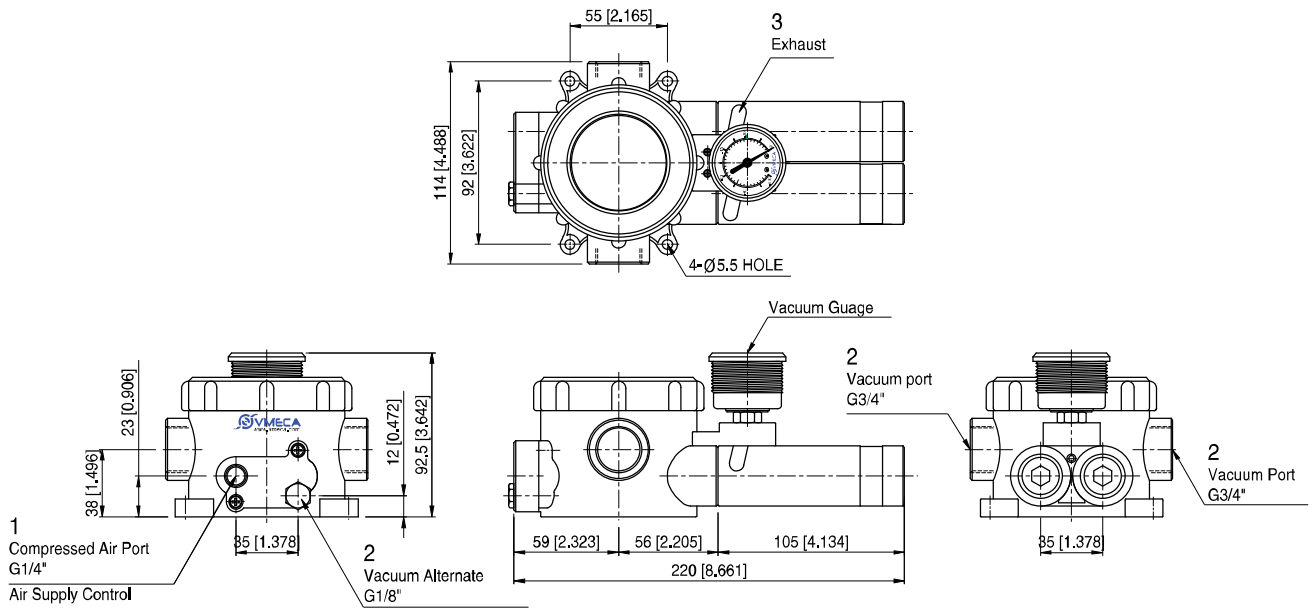

Measure unit : mm [in]

Standard

VTC 3022.. / VTCL 3022..

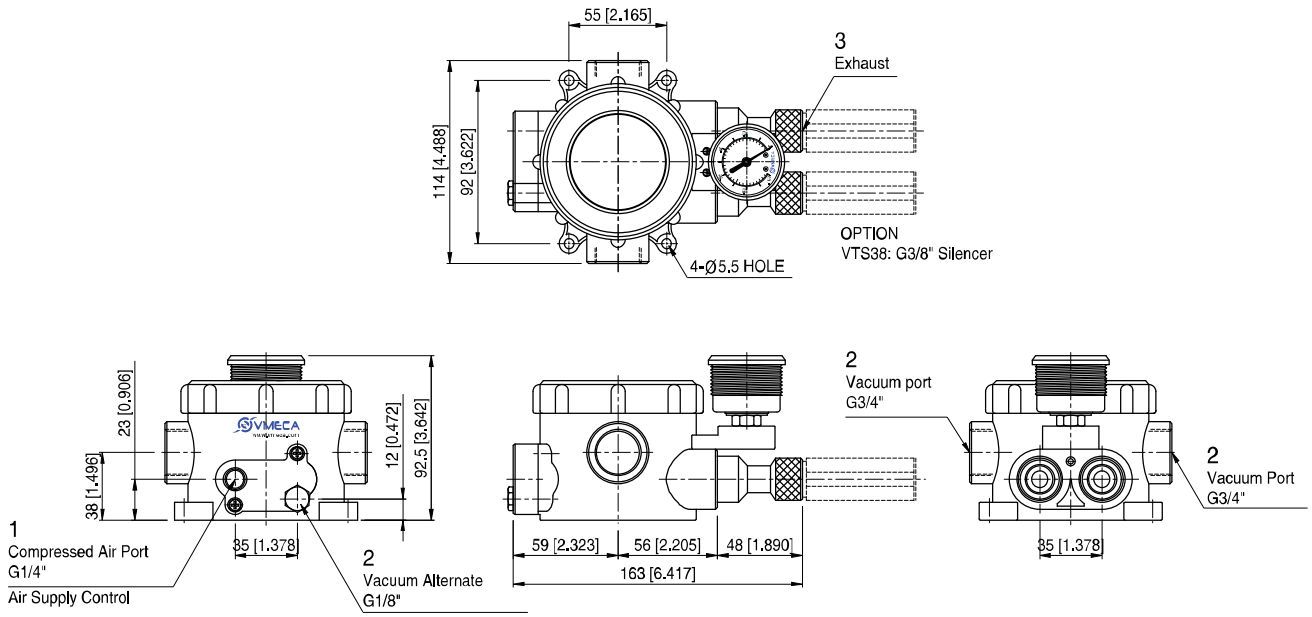

Measure unit : mm [in]

VTC Series

Max. vacuum level : -93 kPa (-27.46 inHg)

Max. flow rate : 1,364 Nl/min (48.17 scfm)

Supply air pressure : 3 ~ 6 bar, max 7 bar (43.5~87 psi, max 101.5 psi)

Air consumption : 194~608 Nl/min (6.85~21.47 scfm)

Supply air type : Dry compressed air

Working temperature : -20℃ to +80℃

Noise level : 60~65 dBA

Main advantages

- Patented design.
- High vacuum flow and vacuum level.
- High operational reliability despite fluctuating or low compressed-air pressure.
- Intergrated high dirt holding capacity pleated filter.
- Automatic vacuum filter cleaning system.
- Compact size and light weight.
- Minimize energy consumption with AS-KIT (Air-saving kit)
- Air control / Vacuum release valves and Vacuum switch available.
- Easily mountable and inerchangeable vacuum cartridge
- Long life time.

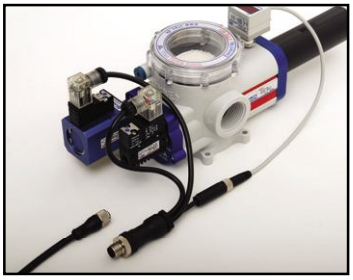

▲ BUS Cable

Order No.

VTC 3134 - 2 - AS - A3 R3 - CL - S2 N V

① ② ③ ④ ⑤ ⑥ ⑦ ⑧ ⑨

① Series

	VTC3122 - 2 stage nozzle x 2 ea
	VTC3123 - 2 stage nozzle x 3 ea
	VTC3124 - 2 stage nozzle x 4 ea
	VTC3132 - 3 stage nozzle x 2 ea
	VTC3133 - 3 stage nozzle x 3 ea
•	**VTC3134** - 3 stage nozzle x 4 ea

② Filter element & Connection port

		Material	Connection port
•	**2**	Polyester (PE)	BSP Thread(G)

③ Air saving kit (108)

	No mark	- Not attached
•	**AS**	- Attached

④ Voltage of air supply control valve

	A1	- AC110V
	A2	- AC220V
•	**A3**	- DC24V
	D1*	- AC110V
	D2*	- AC220V
	D3*	- DC24V

* D.. : Double solenoid valve is available only with 'DN' or 'DL', section ⑥

⑤ Voltage of vacuum release control valve

	R1	- AC110V
	R2	- AC220V
•	**R3**	- DC24V

⑥ Solenoid Terminal

	DN	- DIN type without lead wire
	DL	- DIN type with lamp without lead wire
•	**CL***	- Connector type with lamp & 0.3 m lead wire
	2B*	- DIN type with '2 in 1' BUS cable (Air control v/v + Vacuum release v/v)
	3B*	- DIN type with '3 in 1' BUS cable (Air control v/v + Vacuum release v/v + Digital switch)

* Can not available with double solenoid valve

※ Remark
CL : Available only with DC24V
3B : Available only with DC24V
Available only with 'S2' or 'S2P', section ⑦

☞ **About 'BUS cable' (340, 341)**

⑦ Vacuum switch

	No mark	- Vacuum gauge.
•	**S2(P)**	- Digital display output 2points, No analog supply M8-4Pin Connector type 0.3m lead wire.
	SG2(P)	- Digital display output 2 points, No analog supply Grommet type 4-Core 2m lead wire.
	SG3(P)	- Digital display output 2 points, Analog supply Grommet type 5-Core 2m lead wire.

※ Remark: ① S..(P) → Output type :PNP open collector

② VCM8 42 : M8-4Pin connector wire. Only for type S2 or S2(P).

⑧ Non-return valve

	No mark	- Standard
•	**N**	- Non-return valve.

⑨ Sealing

	No mark	- Standard
•	**V**	- Viton®
	E	- EPDM

Performance Data

Model	MAX. Vacuum (-kPa)	Feed pressure (MPa)	Vacuum flow, Nl/min, at different vacuum levels -kPa (-mmHg)									
			0 (0)	10 (75)	20 (150)	30 (225)	40 (300)	50 (375)	60 (450)	70 (525)	80 (600)	90 (675)
VTC 3122	75	0.22	328	245	176	106	62.8	57	33	9.2	-	-
	93	0.3	340	304	212	128	66	64	44	33	12.8	3.8
	93	0.4	342	308	255	188	138	86	46.6	34.6	13.8	4.2
VTC 3123	75	0.22	492	367	264	159	94	86	50	14	-	-
	93	0.3	510	456	318	192	99	96	66	50	19	6
	93	0.4	513	462	383	282	207	129	70	52	21	6.3
VTC 3124	75	0.22	656	490	352	212	126	114	66	18	-	-
	93	0.3	680	608	424	256	132	128	88	66	26	7.6
	93	0.4	684	616	510	376	276	172	93	69	28	8.4
VTC 3132	75	0.22	604	245	176	106	62.8	57	33	9.2	-	-
	93	0.3	676	304	212	128	66	64	44	33	12.8	3.8
	93	0.4	682	308	255	188	138	86	46.6	34.6	13.8	4.2
VTC 3133	75	0.22	902	368	264	159	94	86	50	14	-	-
	93	0.3	1014	456	318	192	99	96	66	50	19	6
	93	0.4	1023	462	383	282	207	129	70	52	21	6.3
VTC 3134	75	0.22	1208	490	352	212	126	114	66	18	-	-
	93	0.3	1352	608	424	256	132	128	88	66	26	7.6
	93	0.4	1364	616	510	376	276	172	93	69	28	8.4

Model	Feed pressure (MPa)	Air consumption (Nl/min)	Time, s/l, to evacuate a volume to different vacuum levels -kPa (-mmHg)								
			10 (75)	20 (150)	30 (225)	40 (300)	50 (375)	60 (450)	70 (525)	80 (600)	90 (675)
VTC 3122	0.22	194	0.018	0.065	0.108	0.2	0.25	0.395	0.81	-	-
	0.3	236	0.016	0.05	0.07	0.16	0.23	0.34	0.5	0.795	2.01
	0.4	304	0.014	0029	0.043	0.05	0.13	0.25	0.355	0.71	1.75
VTC 3123	0.22	291	0.01	0.04	0.07	0.13	0.16	0.24	0.54	-	-
	0.3	354	0.009	0.03	0.06	0.1	0.13	0.21	0.26	0.4	1.27
	0.4	456	0.008	0.019	0.03	0.033	0.08	0.16	0.23	0.35	1.17
VTC 3124	0.22	388	0.008	0.03	0.05	0.095	0.12	0.18	0.4	-	-
	0.3	472	0.007	0.025	0.048	0.08	0.1	0.16	0.2	0.3	0.95
	0.4	608	0.006	0.015	0.023	0.025	0.06	0.12	0.17	0.26	0.87
VTC 3132	0.22	194	0.011	0.043	0.05	0.17	0.23	0.38	0.81	-	-
	0.3	236	0.01	0.032	0.045	0.15	0.22	0.33	0.48	0.78	1.98
	0.4	304	0.01	0.026	0.037	0.047	0.12	0.23	0.35	0.7	1.72
VTC 3133	0.22	291	0.006	0.03	0.038	0.1	0.14	0.24	0.54	-	-
	0.3	354	0.005	0.02	0.03	0.09	0.12	0.21	0.24	0.4	1.27
	0.4	456	0.004	0.01	0.02	0.03	0.06	0.14	0.2	0.33	1.13
VTC 3134	0.22	388	0.005	0.02	0.027	0.08	0.1	0.18	0.4	-	-
	0.3	472	0.004	0.018	0.02	0.07	0.09	0.16	0.2	0.3	0.95
	0.4	608	0.003	0.01	0.01	0.02	0.05	0.1	0.15	0.25	0.85

▼ VTC 3122 ..

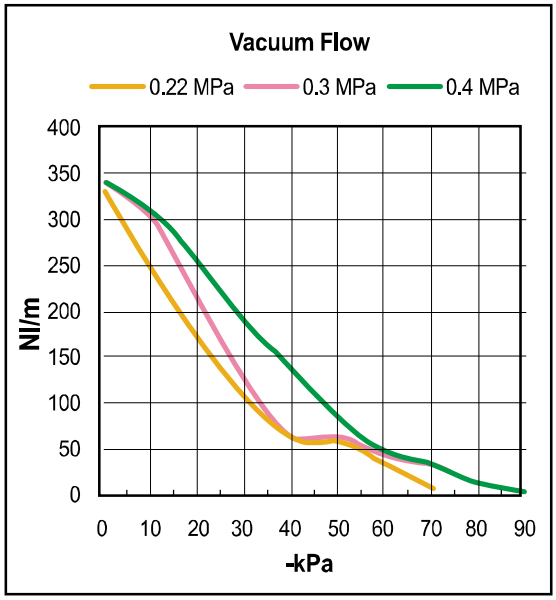

▼ VTC 3132 ..

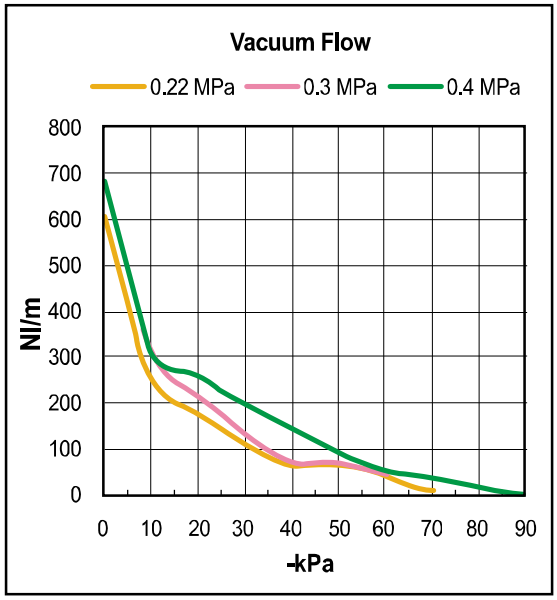

▼ VTC 3123 ..

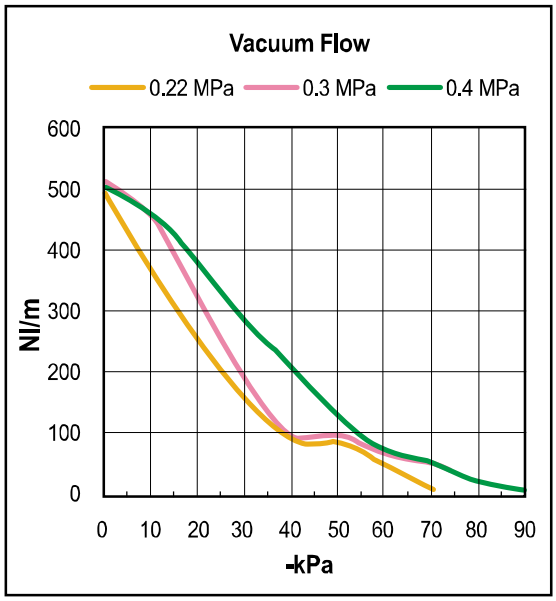

▼ VTC 3133 ..

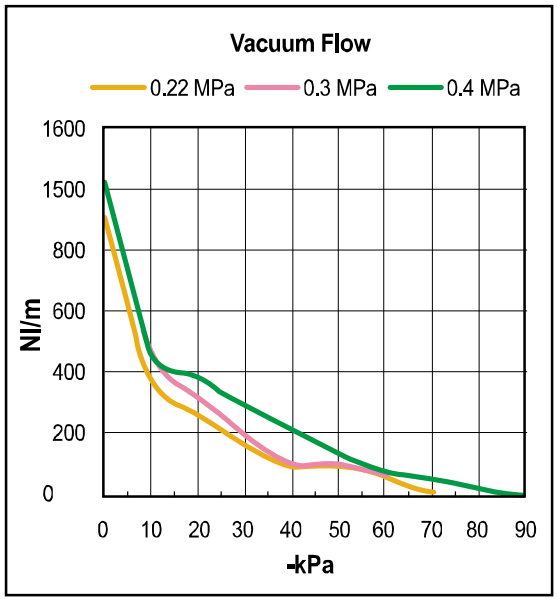

▼ VTC 3124 ..

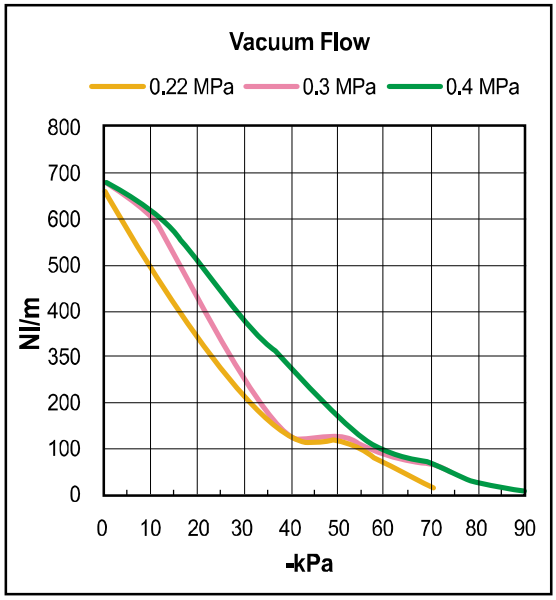

▼ VTC 3134 ..

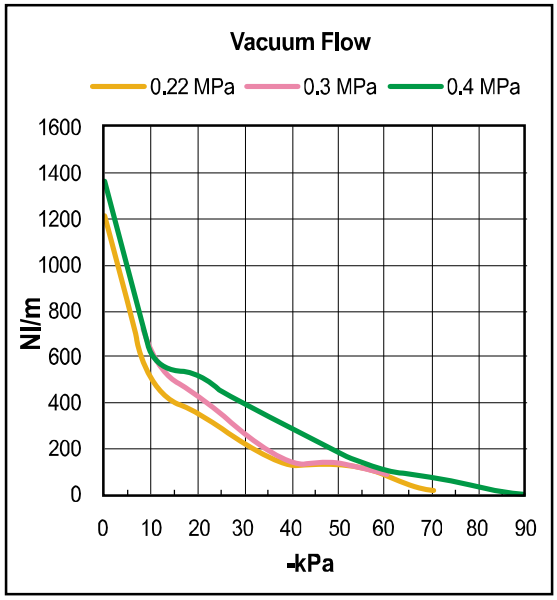

▼ VTC 3123 ..

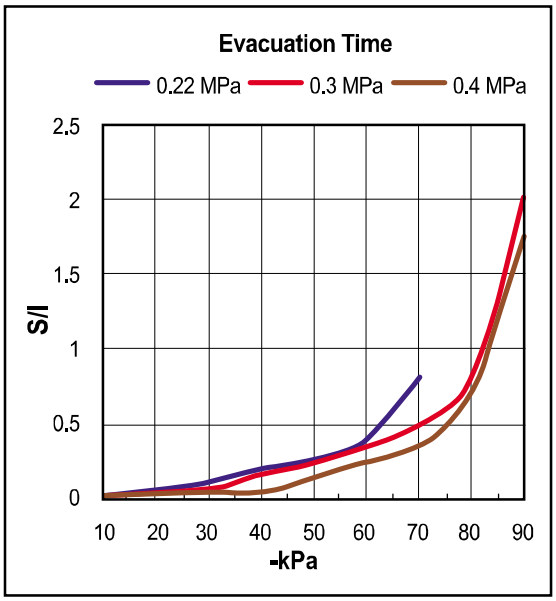

▼ VTC 3123 ..

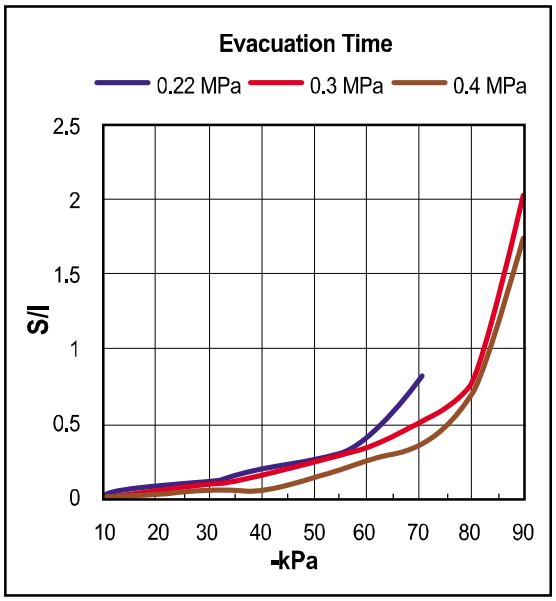

▼ VTC 3123 ..

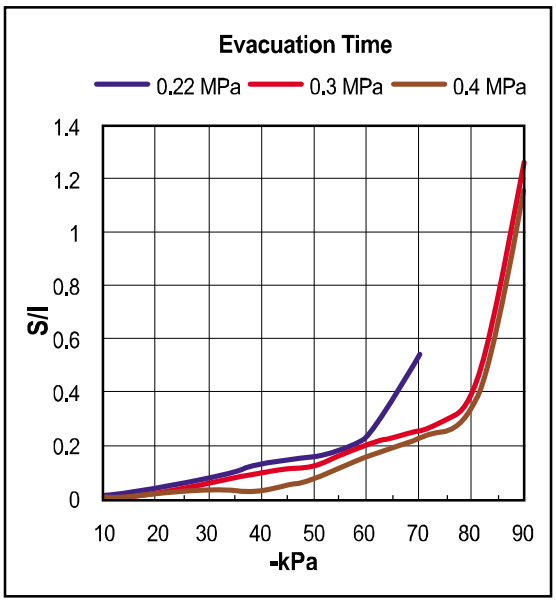

▼ VTC 3133 ..

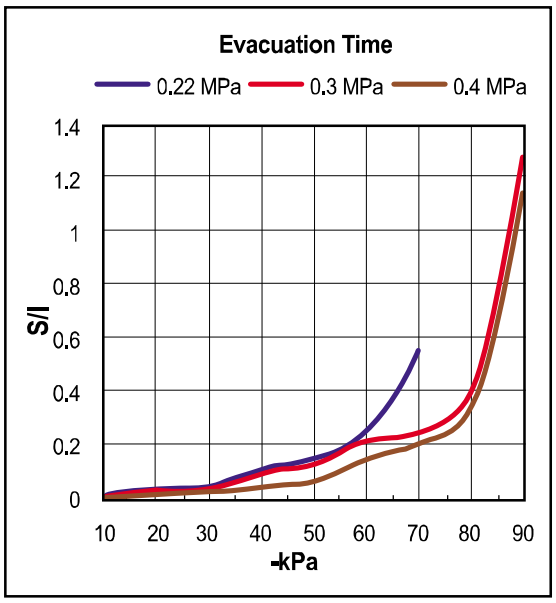

▼ VTC 3124 ..

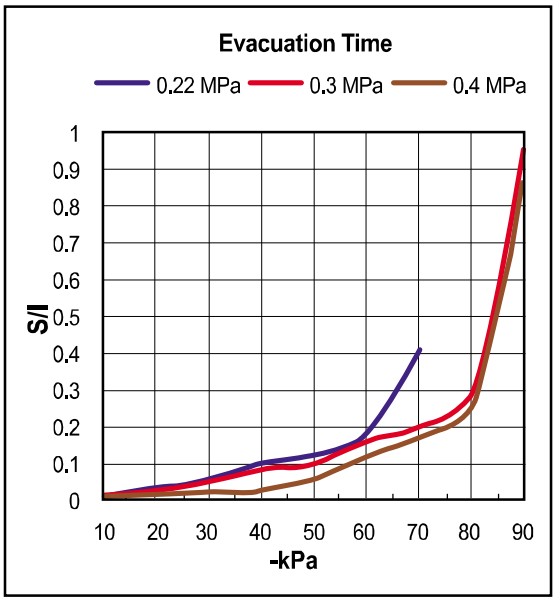

▼ VTC 3134 ..

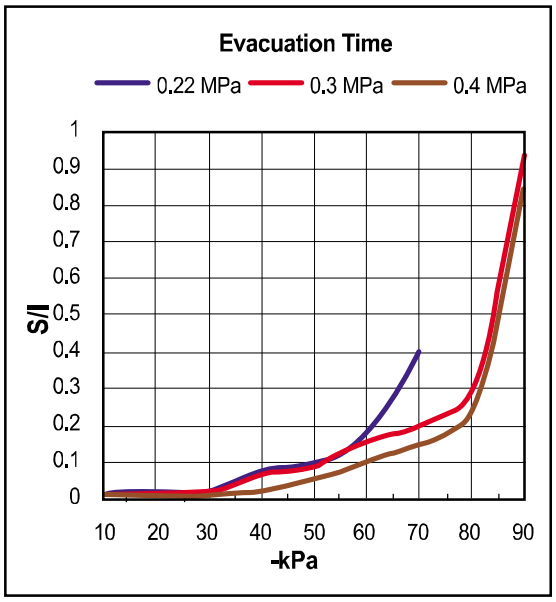

VTCL - Series

Max. vacuum level : -75 kPa (-22.15 inHg)

Max. flow rate : 1,448 Nl/min (51.13 scfm)

Supply air pressure : 4 ~ 6 bar, max 7 bar (58~87 psi, max 101.5 psi)

Air consumption : 140~416 Nl/min (4.94~14.69 scfm)

Supply air type : Dry compressed air

Working temperature : -20℃ to +80℃

Noise level : 60~65 dBA

Main advantages

- Patented design.
- High vacuum flow and vacuum level.
- High operational reliability despite fluctuating or low compressed-air pressure.
- Intergrated high dirt holding capacity pleated filter.
- Automatic vacuum filter cleaning system.
- Compact size and light weight.
- Minimize energy consumption with AS-KIT (Air-saving kit)
- Air control / Vacuum release valves and Vacuum switch available.
- Easily mountable and inerchangeable vacuum cartridge
- Long life time.

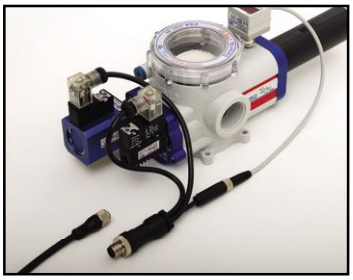

▲ BUS Cable

Order No.

VTCL 3134 - 2 - AS - A3 R3 - CL - S2 N V

① ② ③ ④ ⑤ ⑥ ⑦ ⑧ ⑨

① Series

	VTCL3122 - 2 stage nozzle x 2 ea
	VTCL3123 - 2 stage nozzle x 3 ea
	VTCL3124 - 2 stage nozzle x 4 ea
	VTCL3132 - 3 stage nozzle x 2 ea
	VTCL3133 - 3 stage nozzle x 3 ea
•	**VTCL3134** - 3 stage nozzle x 4 ea

② Filter element & Connection port

		Material	Connection port
•	**2**	Polyester (PE)	BSP Thread(G)

③ Air saving kit (108)

	No mark	- Not attached
•	**AS**	- Attached

④ Voltage of air supply control valve

	A1	- AC110V
	A2	- AC220V
•	**A3**	- DC24V
	D1*	- AC110V
	D2*	- AC220V
	D3*	- DC24V

* D.. : Double solenoid valve is available only with 'DN' or 'DL', section ⑥

⑤ Voltage of vacuum release control valve

	R1	- AC110V
	R2	- AC220V
•	**R3**	- DC24V

⑥ Solenoid Terminal

	DN	- DIN type without lead wire
	DL	- DIN type with lamp without lead wire
•	**CL***	- Connector type with lamp & 0.3 m lead wire
	2B*	- DIN type with '2 in 1' BUS cable (Air control v/v + Vacuum release v/v)
	3B*	- DIN type with '3 in 1' BUS cable (Air control v/v + Vacuum release v/v + Digital switch)

* Can not available with double solenoid valve

※ Remark
CL : Available only with DC24V
3B : Available only with DC24V
Available only with 'S2' or 'S2P', section ⑦

☞ About 'BUS cable' (340, 341)

⑦ Vacuum switch

	No mark	- Vacuum gauge.
•	**S2(P)**	- Digital display output 2points, No analog supply M8-4Pin Connector type 0.3m lead wire.
	SG2(P)	- Digital display output 2 points, No analog supply Grommet type 4-Core 2m lead wire.
	SG3(P)	- Digital display output 2 points, Analog supply Grommet type 5-Core 2m lead wire.

※ Remark: ① S..(P) → Output type :PNP open collector

② VCM8 42 : M8-4Pin connector wire. Only for type S2 or S2(P).

⑧ Non-return valve

	No mark	- Standard
•	**N**	- Non-return valve.

⑨ Sealing

	No mark	- Standard
•	**V**	- Viton®
	E	- EPDM

Performance Data

Model	MAX. Vacuum (-kPa)	Feed pressure (MPa)	Vacuum flow, Nl/min, at different vacuum levels -kPa (-mmHg)									
			0 (0)	10 (75)	20 (150)	30 (225)	40 (300)	50 (375)	60 (450)	70 (525)	80 (600)	90 (675)
VTCL 3122	60	0.4	376	316	220	160	92	56	13.6	-	-	-
	70	0.5	390	352	260	164	100	75	46	23.8	-	-
	75	0.6	400	366	308	200	104	76	64	44	-	-
VTCL 3123	60	0.4	564	474	330	210	138	84	20.4	-	-	-
	70	0.5	585	528	390	246	150	112.5	69	33.9	-	-
	75	0.6	600	549	462	300	156	114	96	66	-	-
VTCL 3124	60	0.4	752	632	440	280	184	112	27.2	-	-	-
	70	0.5	780	704	520	328	200	150	92	45.2	-	-
	75	0.6	800	732	616	400	208	152	128	88	-	-
VTCL 3132	60	0.4	604	344	220	140	92	56	13.6	-	-	-
	70	0.5	688	392	260	164	100	75	46	23.8	-	-
	75	0.6	724	415	308	200	104	76	64	44	-	-
VTCL 3133	60	0.4	906	516	330	210	138	84	20.4	-	-	-
	70	0.5	1032	588	390	246	150	112.5	69	34	-	-
	75	0.6	1086	621	462	300	156	114	96	66	-	-
VTCL 3134	60	0.4	1208	688	440	280	184	112	27	-	-	-
	70	0.5	1376	784	520	328	200	150	92	45	-	-
	75	0.6	1448	828	616	400	208	152	128	88	-	-

Model	Feed pressure (MPa)	Air consumption (Nl/min)	Time, s/l, to evacuate a volume to different vacuum levels -kPa (-mmHg)								
			10 (75)	20 (150)	30 (225)	40 (300)	50 (375)	60 (450)	70 (525)	80 (600)	90 (675)
VTCL 3122	0.4	140	0.018	0.04	0.08	0.145	0.195	0.5	-	-	-
	0.5	170	0.014	0.036	0.075	0.125	0.15	0.2	0.4	-	-
	0.6	208	0.013	0.032	0.06	0.1	0.155	0.18	0.35	-	-
VTCL 3123	0.4	210	0.012	0.029	0.057	0.097	0.127	0.27	-	-	-
	0.5	255	0.009	0.028	0.05	0.083	0.1	0.13	0.26	-	-
	0.6	312	0.009	0.027	0.04	0.06	0.09	0.12	0.2	-	-
VTCL 3124	0.4	280	0.01	0.025	0.04	0.07	0.09	0.2	-	-	-
	0.5	340	0.0067	0.02	0.037	0.065	0.075	0.1	0.2	-	-
	0.6	416	0.006	0.02	0.03	0.055	0.073	0.09	0.15	-	-
VTCL 3132	0.4	140	0.017	0.037	0.073	0.14	0.19	0.45	-	-	-
	0.5	170	0.014	0.032	0.06	0.128	0.16	0.25	0.43	-	-
	0.6	208	0.012	0.03	0.047	0.098	0.15	0.2	0.32	-	-
VTCL 3133	0.4	210	0.016	0.03	0.05	0.09	0.12	0.26	-	-	-
	0.5	255	0.0085	0.028	0.05	0.08	0.1	0.13	0.26	-	-
	0.6	312	0.0079	0.02	0.04	0.06	0.09	0.12	0.2	-	-
VTCL 3134	0.4	280	0.0089	0.023	0.04	0.07	0.09	0.2	-	-	-
	0.5	340	0.0057	0.018	0.03	0.063	0.075	0.1	0.2	-	-
	0.6	416	0.0053	0.015	0.029	0.052	0.071	0.09	0.15	-	-

▼ VTCL 3122 ..

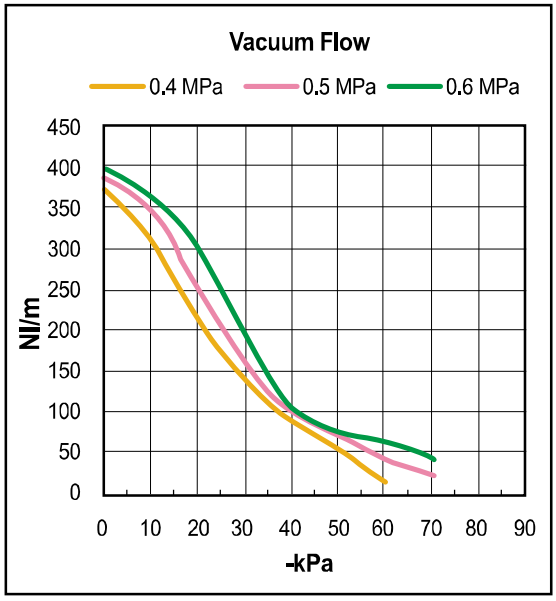

▼ VTCL 3132 ..

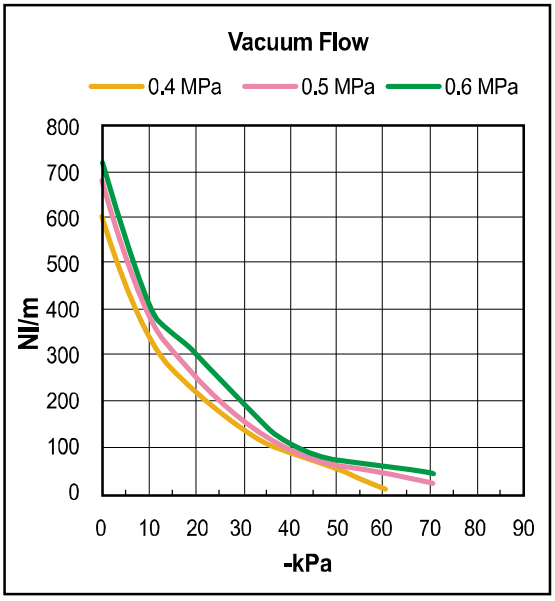

▼ VTCL 3123 ..

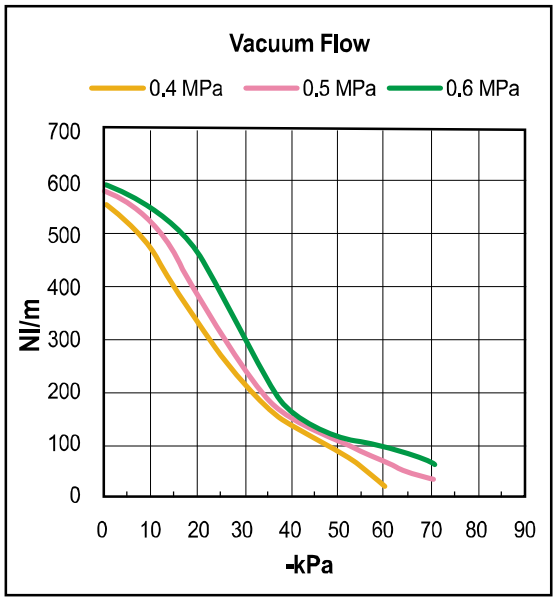

▼ VTCL 3133 ..

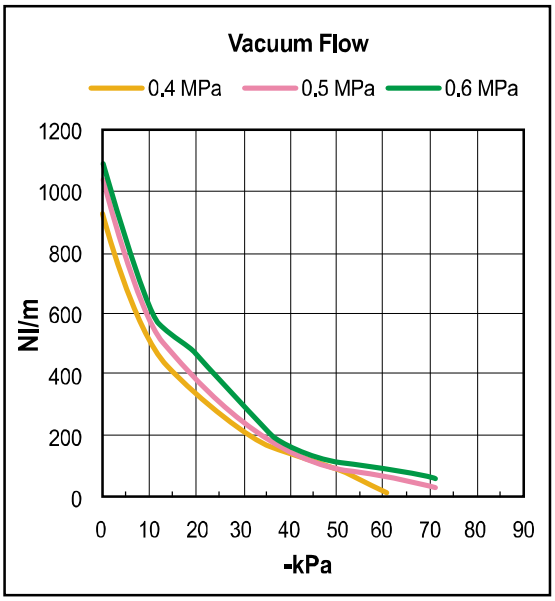

▼ VTCL 3124 ..

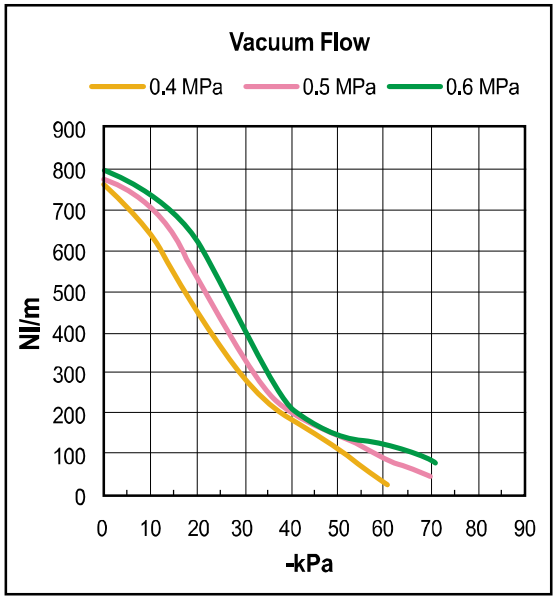

▼ VTCL 3134 ..

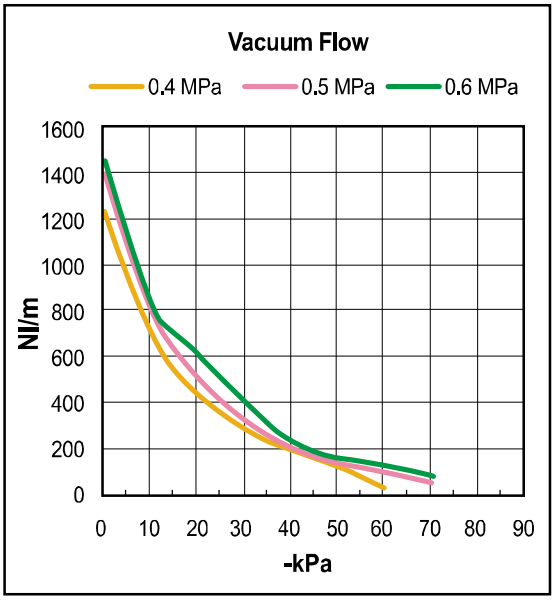

▼ VTCL 3122 ..

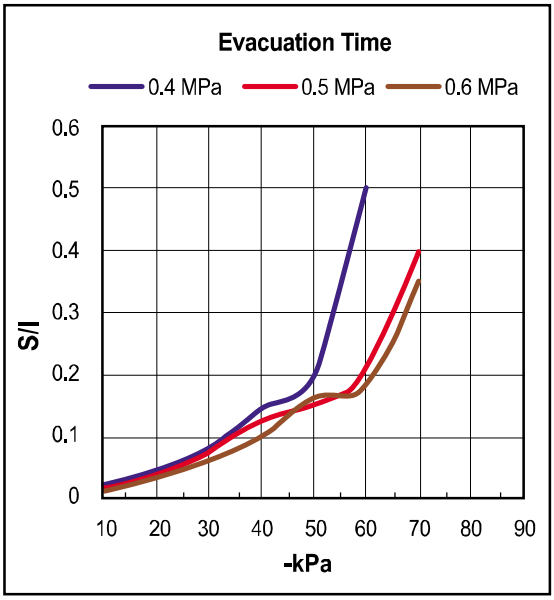

▼ VTCL 3132 ..

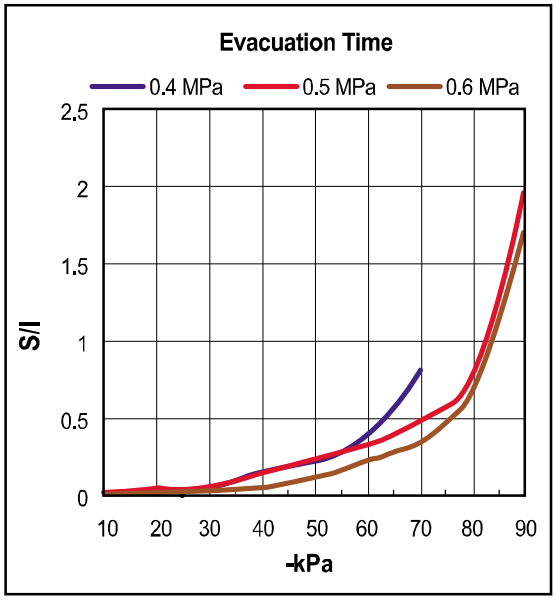

▼ VTCL 3123 ..

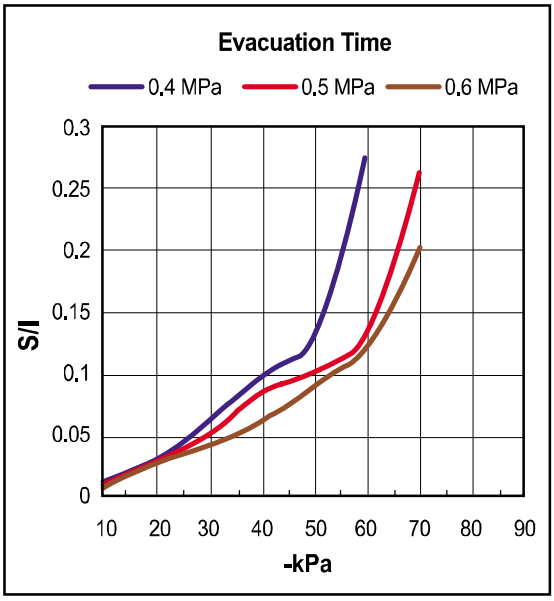

▼ VTCL 3133 ..

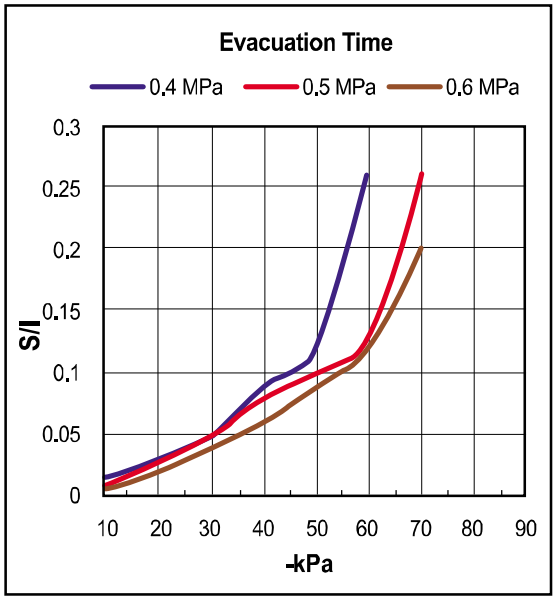

▼ VTCL 3124 ..

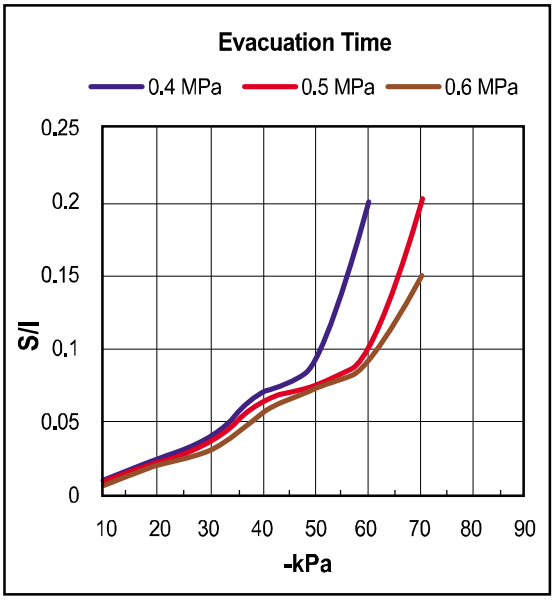

▼ VTCL 3134 ..

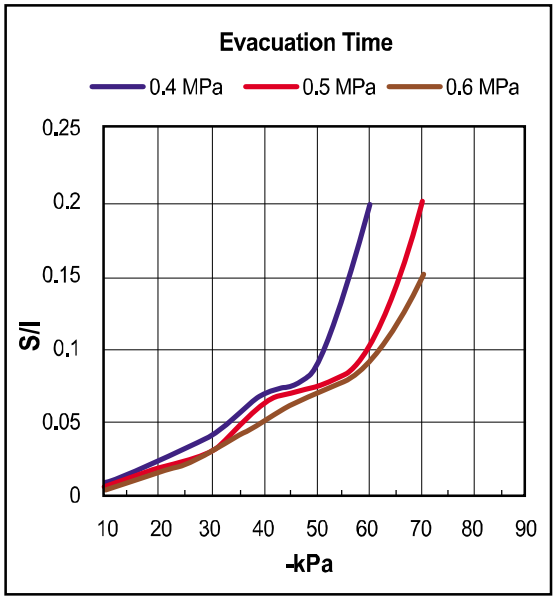

Dimensional Information

With Air Control valve, Vacuum Release Control valve and Digital Vacuum Switch

▼ Series VTC 313( ).. / VTCL 313( )..

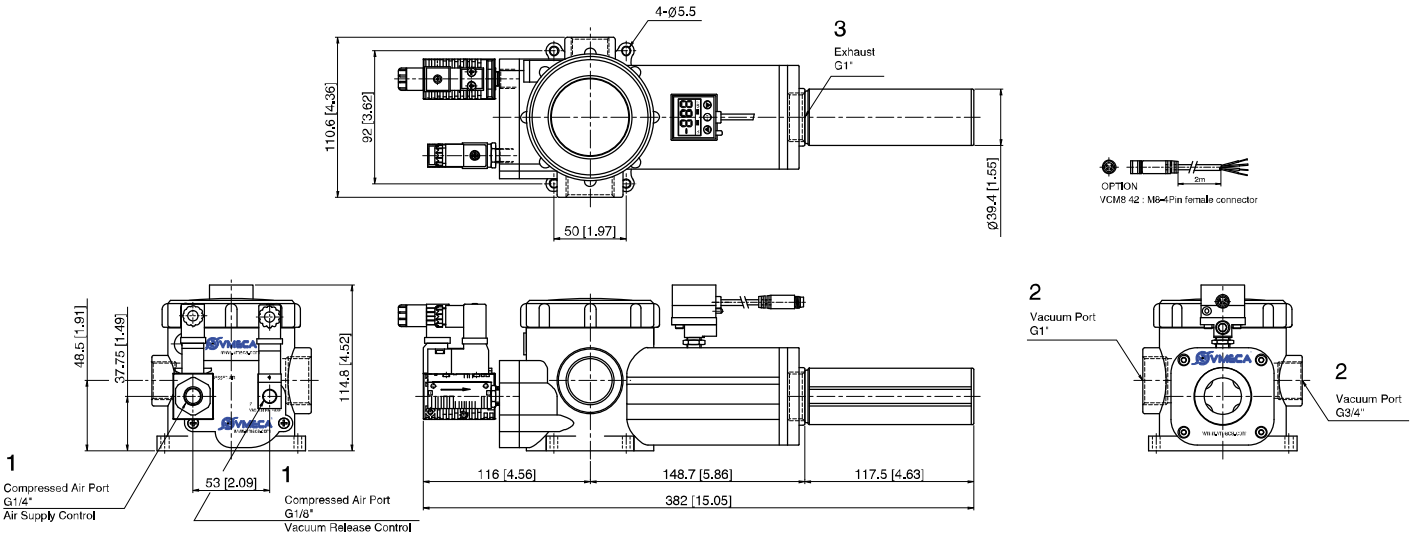

Measure unit : mm [in]

Standard

▼ Series VTC 313( ).. / VTCL 313( )..

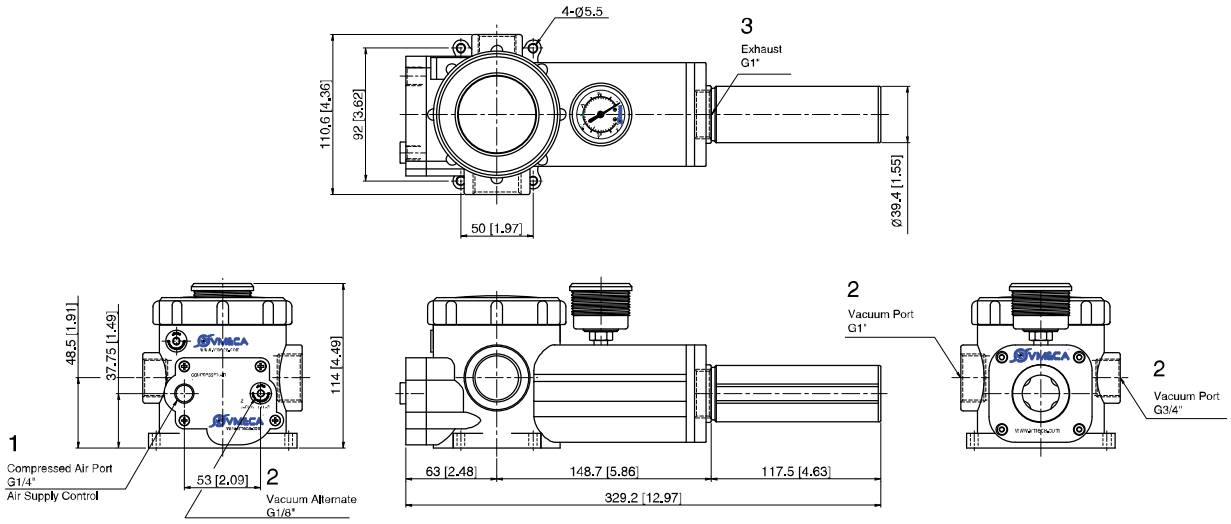

Measure unit : mm [in]

Dimensional Information

With Air Control valve, Vacuum Release Control valve and Digital Vacuum Switch

▼ Series VTC 312( ).. / VTCL 312( )..

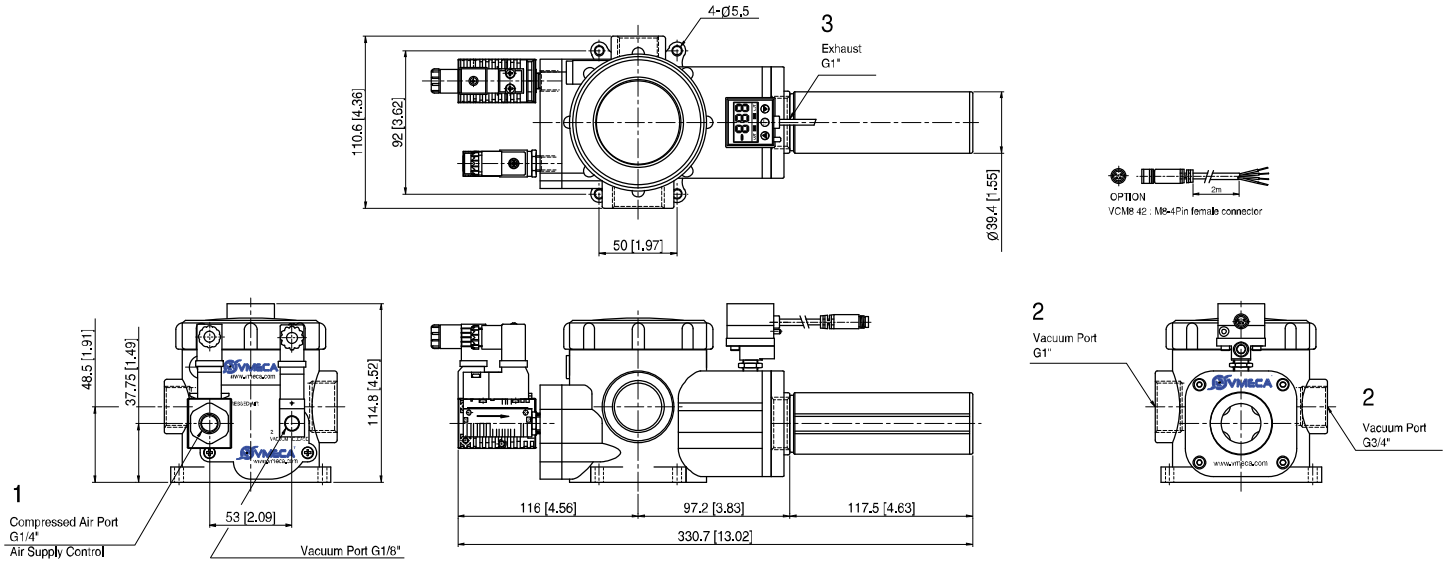

Measure unit : mm [in]

Standard

▼ Series VTC 312( ).. / VTCL 312( )..

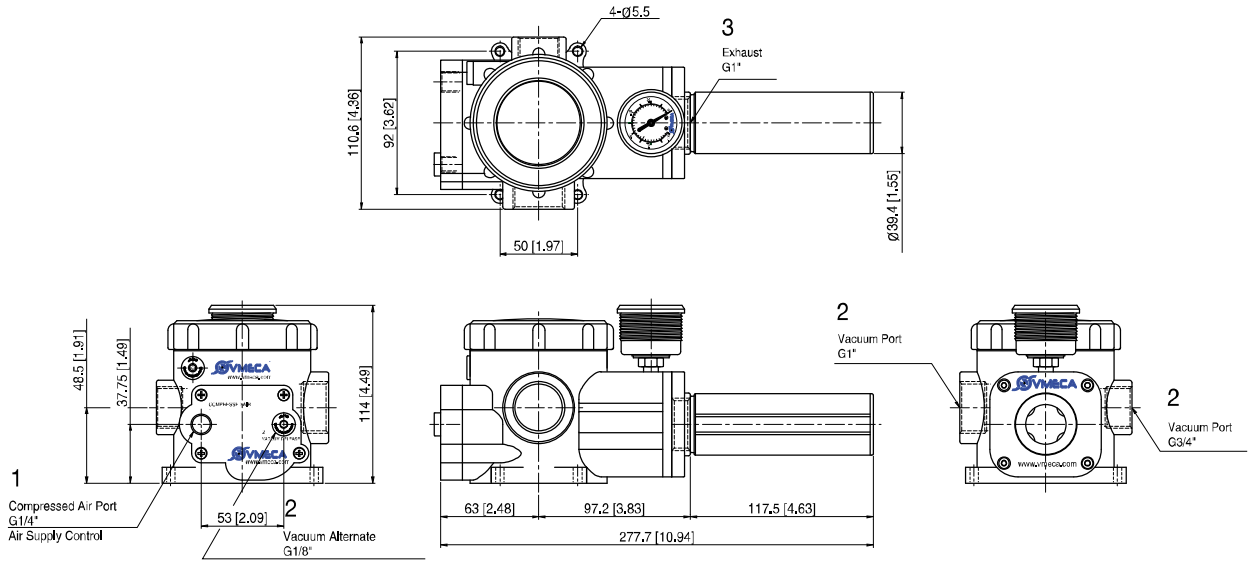

Measure unit : mm [in]